ENGINE (DIAGNOSTICS)

EN(SOHCw/oOBD)

1. Basic Diagnostic Procedure

S068501

A: PROCEDURE S068501E45

1. WITH SUBARU SELECT MONITOR S068501E4501

No.	Step	Check	Yes	No
1	**CHECK ENGINE START FAILURE.** 1) Ask the customer when and how the trouble occurred using the interview check list. <Ref. to EN(SOHCw/oOBD)-4 CHECK, Check List for Interview.> 2) Start the engine.	Does the engine start?	Go to step **2**.	Inspection using “Diagnostics for Engine Starting Failure”. <Ref. to EN(SOHCw/oOBD)-47 Diagnostics for Engine Starting Failure.>
2	**CHECK ILLUMINATION OF CHECK ENGINE MALFUNCTION INDICATOR LAMP (MIL).** <Ref. to EN(SOHCw/oOBD)-33 ACTIVATION OF CHECK ENGINE MALFUNCTION INDICATOR LAMP (MIL), Engine Malfunction Indicator Lamp (MIL).>	Does MIL illuminate?	Go to step **3**.	Inspection using “General Diagnostic Table”. <Ref. to EN(SOHCw/oOBD)-113 INSPECTION, General Diagnostic Table.>
3	**CHECK INDICATION OF DTC ON DISPLAY.** 1) Turn ignition switch to OFF. 2) Connect the Subaru Select Monitor to data link connector. 3) Turn ignition switch to ON and the Subaru Select Monitor switch to ON. 4) Read DTC on the Subaru Select Monitor. <Ref. to EN(SOHCw/oOBD)-27 WITH SUBARU SELECT MONITOR, OPERATION, Read Diagnostic Trouble Code.>	Does the Subaru Select Monitor indicate DTC? <Ref. to EN(SOHCw/oOBD)-65 LIST, List of Diagnostic Trouble Code (DTC).>	Record diagnostic trouble code. Repair the trouble cause. <Ref. to EN(SOHCw/oOBD)-68 Diagnostic Procedure with Diagnostic Trouble Code (DTC).> Go to step **4**.	Repair the related parts. NOTE: If DTC is not shown on display although the MIL illuminates, perform diagnostics of MIL (CHECK ENGINE malfunction indicator lamp) circuit or combination meter. <Ref. to EN(SOHCw/oOBD)-33 Engine Malfunction Indicator Lamp (MIL).>
4	**PERFORM THE DIAGNOSIS.** 1) Perform the clear memory mode. <Ref. to EN(SOHCw/oOBD)-31 OPERATION, Clear Memory Mode.> 2) Perform the inspection mode. <Ref. to EN(SOHCw/oOBD)-29 OPERATION, Inspection Mode.>	Does the Subaru Select Monitor indicate DTC? <Ref. to EN(SOHCw/oOBD)-65 LIST, List of Diagnostic Trouble Code (DTC).>	Record diagnostic trouble code. Repair the trouble cause. <Ref. to EN(SOHCw/oOBD)-68 Diagnostic Procedure with Diagnostic Trouble Code (DTC).> Go to step **4**.	Complete the diagnosis.

2. WITHOUT SUBARU SELECT MONITOR

S068501E4502

CAUTION:
- **Check the connector while it is connected unless specified otherwise.**
- **Be sure to check again from the beginning in order to prevent secondary trouble caused by repair work.**

No.	Step	Check	Yes	No
1	**CHECK ENGINE START FAILURE.** 1) Ask the customer when and how the trouble occurred using the interview check list. <Ref. to EN(SOHCw/oOBD)-4 CHECK, Check List for Interview.> 2) Start the engine.	Does the engine start?	Go to step **2**.	Inspection using “Diagnostics for Engine Starting Failure”. <Ref. to EN(SOHCw/oOBD)-47 Diagnostics for Engine Starting Failure.>
2	**CHECK ILLUMINATION OF CHECK ENGINE MALFUNCTION INDICATOR LAMP (MIL).** <Ref. to EN(SOHCw/oOBD)-33 ACTIVATION OF CHECK ENGINE MALFUNCTION INDICATOR LAMP (MIL), Engine Malfunction Indicator Lamp (MIL).>	Does MIL illuminate?	Go to step **3**.	Inspection using “9. General Diagnostic Table”. <Ref. to EN(SOHCw/oOBD)-113 INSPECTION, General Diagnostic Table.>
3	**CHECK INDICATION OF DTC ON MIL.** 1) Perform the read diagnostic trouble code (read memory mode). <Ref. to EN(SOHCw/oOBD)-27 WITHOUT SUBARU SELECT MONITOR, OPERATION, Read Diagnostic Trouble Code.> 2) Read DTC on MIL.	Does the MIL indicate DTC? <Ref. to EN(SOHCw/oOBD)-65 LIST, List of Diagnostic Trouble Code (DTC).>	Repair the trouble cause. Go to step **4**.	Repair the related parts. NOTE: If DTC is not shown on MIL although the MIL illuminates, perform diagnostics of MIL (CHECK ENGINE malfunction indicator lamp) circuit or combination meter. <Ref. to EN(SOHCw/oOBD)-33 Engine Malfunction Indicator Lamp (MIL).>
4	**PERFORM THE DIAGNOSIS.** 1) Perform the clear memory mode. <Ref. to EN(SOHCw/oOBD)-31 OPERATION, Clear Memory Mode.> 2) Perform the inspection mode. <Ref. to EN(SOHCw/oOBD)-29 OPERATION, Inspection Mode.>	Does the MIL indicate DTC? <Ref. to EN(SOHCw/oOBD)-65 LIST, List of Diagnostic Trouble Code (DTC).>	Repair the trouble cause. Go to step **4**.	Complete the diagnosis.

2. Check List for Interview S068502

A: CHECK S068502A04

1. CHECK LIST NO. 1 S068502A0401

Check the following items when problem has occurred.

NOTE:
Use copies of this page for interviewing customers.

Customer's name		Engine no.	
Date of sale		Fuel brand	
Date of repair		Odometer reading	km
Vin no.			miles
Weather	☐ Fine ☐ Cloudy ☐ Rainy ☐ Snowy ☐ Various/Others:		
Outdoor temperature	°F (°C)		
	☐ Hot ☐ Warm ☐ Cool ☐ Cold		
Place	☐ Highway ☐ Suburbs ☐ Inner city ☐ Uphill ☐ Downhill ☐ Rough road ☐ Others:		
Engine temperature	☐ Cold ☐ Warming-up ☐ After warming-up ☐ Any temperature ☐ Others:		
Engine speed	rpm		
Vehicle speed	MPH		
Driving conditions	☐ Not affected ☐ At starting ☐ While idling ☐ At racing ☐ While accelerating ☐ While cruising ☐ While decelerating ☐ While turning (RH/LH)		
Headlight	☐ ON/☐ OFF	Rear defogger	☐ ON/☐ OFF
Blower	☐ ON/☐ OFF	Radio	☐ ON/☐ OFF
A/C compressor	☐ ON/☐ OFF	CD/Cassette	☐ ON/☐ OFF
Cooling fan	☐ ON/☐ OFF	Car phone	☐ ON/☐ OFF
Front wiper	☐ ON/☐ OFF	CB	☐ ON/☐ OFF
Rear wiper	☐ ON/☐ OFF		

2. CHECK LIST NO. 2 S068502A0402

Check the following items about the vehicle's state when MIL turns on.

NOTE:
Use copies of this page for interviewing customers.

a) Other warning lights or indicators turn on. ☐ Yes/☐ No
☐ Low fuel warning light ☐ Charge indicator light ☐ AT diagnostics indicator light ☐ ABS warning light ☐ Engine oil pressure warning light
b) Fuel level
● Lack of gasoline: ☐ Yes/☐ No ● Indicator position of fuel gauge:
c) Intentional connecting or disconnecting of harness connectors or spark plug cords: ☐ Yes/☐ No
● What:
d) Intentional connecting or disconnecting of hoses: ☐ Yes/☐ No
● What:
e) Installing of parts other than genuine parts: ☐ Yes/☐ No
● What: ● Where:
f) Occurrence of noise: ☐ Yes/☐ No
● From where: ● What kind:
g) Occurrence of smell: ☐ Yes/☐ No
● From where: ● What kind:
h) Intrusion of water into engine compartment or passenger compartment: ☐ Yes/☐ No
i) Troubles occurred
☐ Engine does not start. ☐ Engine stalls during idling. ☐ Engine stalls while driving. ☐ Engine speed decreases. ☐ Engine speed does not decrease. ☐ Rough idling ☐ Poor acceleration ☐ Back fire ☐ After fire ☐ No shift ☐ Excessive shift shock

3. General Description S068001

A: CAUTION S068001A03

1) Airbag system wiring harness is routed near the engine control module (ECM), main relay and fuel pump relay.

CAUTION:
● All Airbag system wiring harness and connectors are colored yellow. Do not use electrical test equipment on these circuit.
● Be careful not to damage Airbag system wiring harness when servicing the engine control module (ECM), transmission control module (TCM), main relay and fuel pump relay.

2) Never connect the battery in reverse polarity.
● The ECM will be destroyed instantly.
● The fuel injector and other part will be damaged in just a few minutes more.
3) Do not disconnect the battery terminals while the engine is running.
● A large counter electromotive force will be generated in the alternator, and this voltage may damage electronic parts such as ECM, etc.
4) Before disconnecting the connectors of each sensor and the ECM, be sure to turn OFF the ignition switch.
5) Poor contact has been identified as a primary cause of this problem. To measure the voltage and/or resistance of individual sensors or all electrical control modules at the harness side connector, use a tapered pin with a diameter of less than 0.64 mm (0.025 in). Do not insert the pin more than 5 mm (0.20 in) into the part.
6) Before removing ECM from the located position, disconnect two cables on battery.
● Otherwise, the ECM may be damaged.

CAUTION:
When replacing ECM, be careful not to use the wrong spec. ECM to avoid any damage on fuel injection system.

7) The connectors to each sensor in the engine compartment and the harness connectors on the engine side and body side are all designed to be waterproof. However, it is still necessary to take care not to allow water to get into the connectors when washing the vehicle, or when servicing the vehicle on a rainy day.

8) Use engine grounding terminal or engine proper as the grounding point to the body when measuring voltage and resistance in the engine compartment.

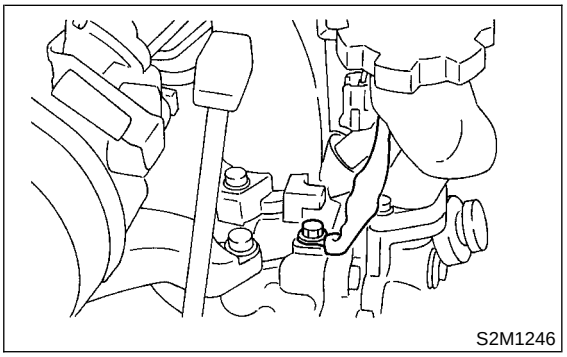
S2M1246

9) Use TCM mounting stud bolts at the body head grounding point when measuring voltage and resistance inside the passenger compartment.

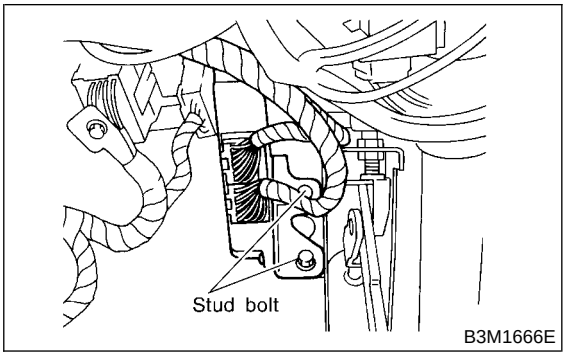

B3M1666E

10) Every MFI-related part is a precision part. Do not drop them.
11) Observe the following cautions when installing a radio in MFI equipped models.

CAUTION:
● The antenna must be kept as far apart as possible from the control unit.
(The ECM is located in the engine compartment.)
● The antenna feeder must be placed as far apart as possible from the ECM and MFI harness.
● Carefully adjust the antenna for correct matching.
● When mounting a large power type radio, pay special attention to the three items above mentioned.
● Incorrect installation of the radio may affect the operation of the ECM.

12) Before disconnecting the fuel hose, disconnect the fuel pump connector and crank the engine for more than five seconds to release pressure in the fuel system. If engine starts during this operation, run it until it stops.
13) Problems in the electronic-controlled automatic transmission may be caused by failure of the

engine, the electronic control system, the transmission proper, or by a combination of these. These three causes must be distinguished clearly when performing diagnostics.
14) Diagnostics should be conducted by rotating with simple, easy operations and proceeding to complicated, difficult operations. The most important thing in diagnostics is to understand the customer's complaint, and distinguish between the three causes.
15) In AT vehicles, do not continue the stall for more than five seconds at a time (from closed throttle, fully open throttle to stall engine speed).
16) On ABS vehicle, when performing driving test in jacked-up or lifted-up position, sometimes the warning light may be lit, but this is not a malfunction of the system. The reason for this is the speed difference between the front and rear wheels. After diagnosis of engine control system, perform the ABS memory clearance procedure of self-diagnosis system.

B: INSPECTION S068001A10

Before performing diagnostics, check the following items which might affect engine problems:

1. BATTERY S068001A1001

1) Measure battery voltage and specific gravity of electrolyte.

Standard voltage: 12 V

Specific gravity: Above 1.260

2) Check the condition of the main and other fuses, and harnesses and connectors. Also check for proper grounding.

2. ENGINE GROUNDING S068001A1002

Make sure the engine grounding terminal is properly connected to the engine.

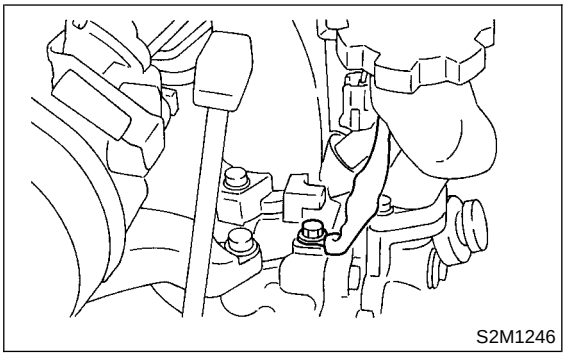

C: NOTE S068001A15

1. ENGINE AND EMISSION CONTROL SYSTEM S068001A1501

● The Multipoint Fuel Injection (MFI) system is a system that supplies the optimum air-fuel mixture to the engine for all the various operating conditions through the use of the latest electronic technology.
With this system fuel, which is pressurized at a constant pressure, is injected into the intake air passage of the cylinder head. The injection quantity of fuel is controlled by an intermittent injection system where the electro-magnetic injection valve (fuel injector) opens only for a short period of time, depending on the quantity of air required for one cycle of operation. In actual operation, the injection quantity is determined by the duration of an electric pulse applied to the fuel injector and this permits simple, yet highly precise metering of the fuel.
● Further, all the operating conditions of the engine are converted into electric signals, and this results in additional features of the system, such as large improved adaptability, easier addition of compensating element, etc.
The MFI system also has the following features:

- Reduced emission of harmful exhaust gases.
- Reduced in fuel consumption.
- Increased engine output.
- Superior acceleration and deceleration.
- Superior startability and warm-up performance in cold weather since compensation is made for coolant and intake air temperature.

D: PREPARATION TOOL S068001A17

ILLUSTRATION	TOOL NUMBER	DESCRIPTION	REMARKS
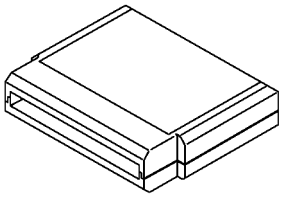 B2M3876	24082AA150 (Newly adopted tool)	CARTRIDGE	Troubleshooting for electrical systems.
 B2M3877	22771AA030	SELECT MONITOR KIT	Troubleshooting for electrical systems. ● English: 22771AA030 (Without printer) ● German: 22771AA070 (Without printer) ● French: 22771AA080 (Without printer) ● Spanish: 22771AA090 (Without printer)

MEMO:

4. Electrical Components Location S068507

A: LOCATION S068507A13

1. MODULE S068507A1301

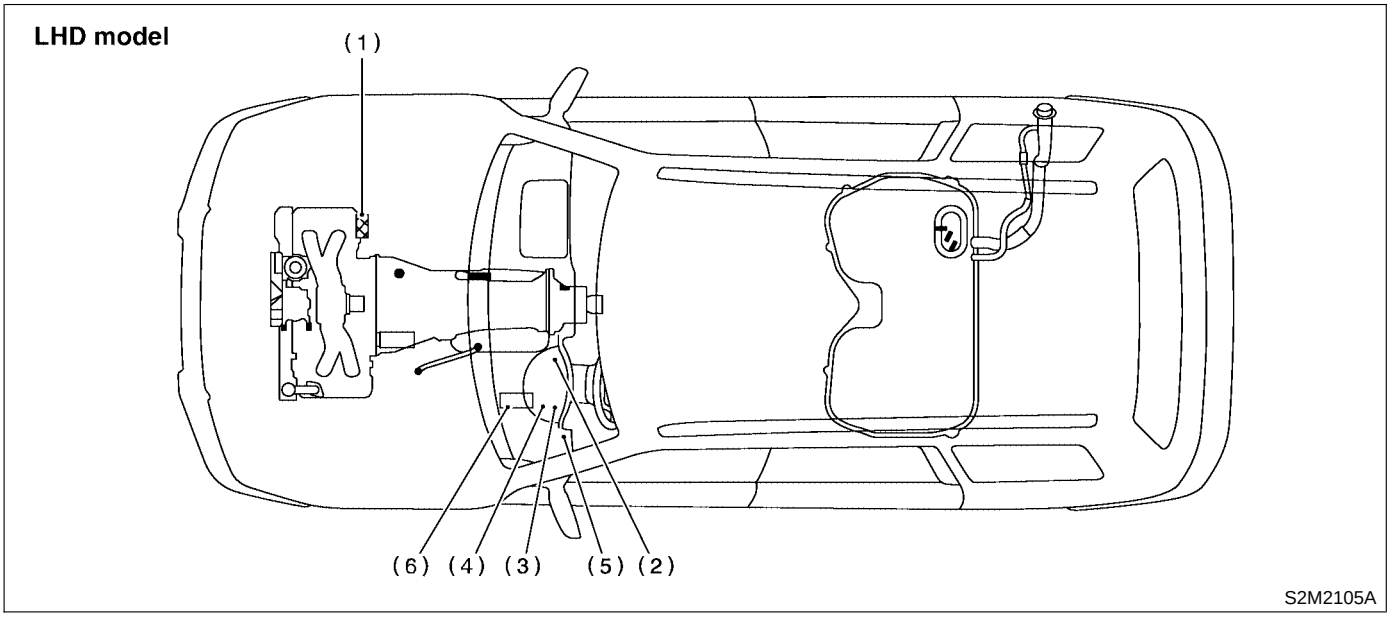

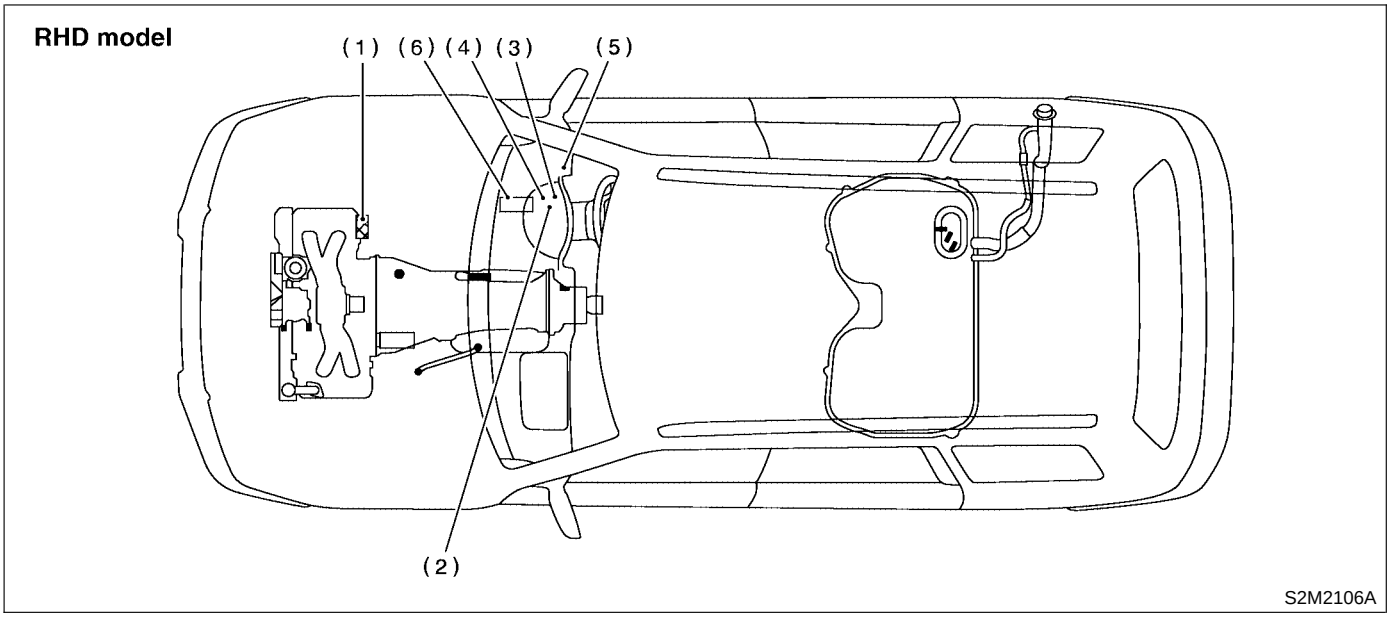

(1) Engine control module (ECM)
(2) CHECK ENGINE malfunction indicator lamp (MIL)
(3) Read memory connector
(4) Test mode connector
(5) Data link connector
(6) Transmission control module (TCM)

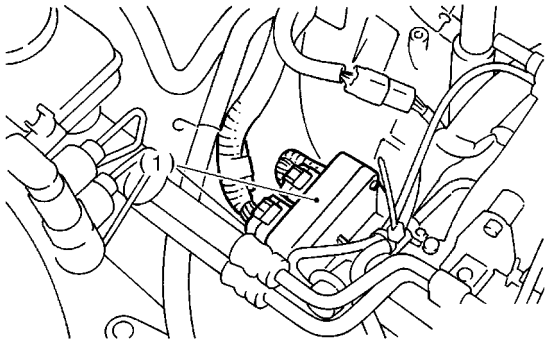

S2M0533D

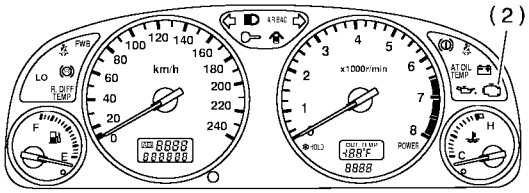

S2M2107A

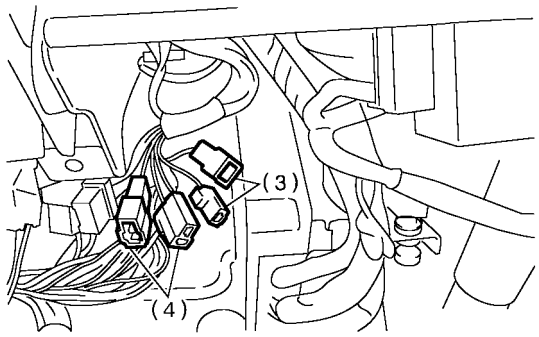

S2M2108A

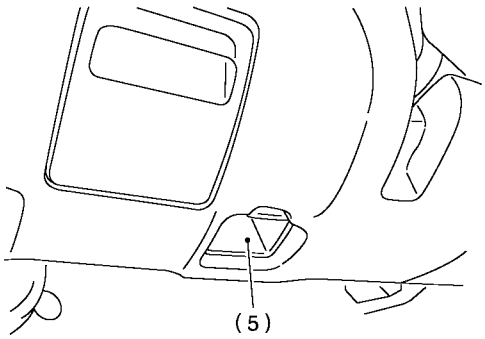

S2M2157C

LHD

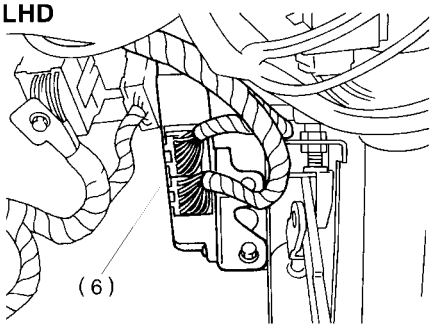

B3M1666H

RHD

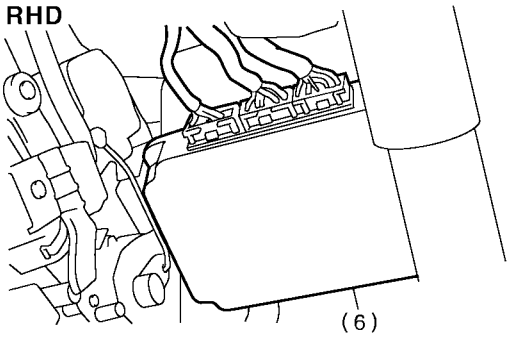

B3M1652C

2. SENSOR S068507A1302

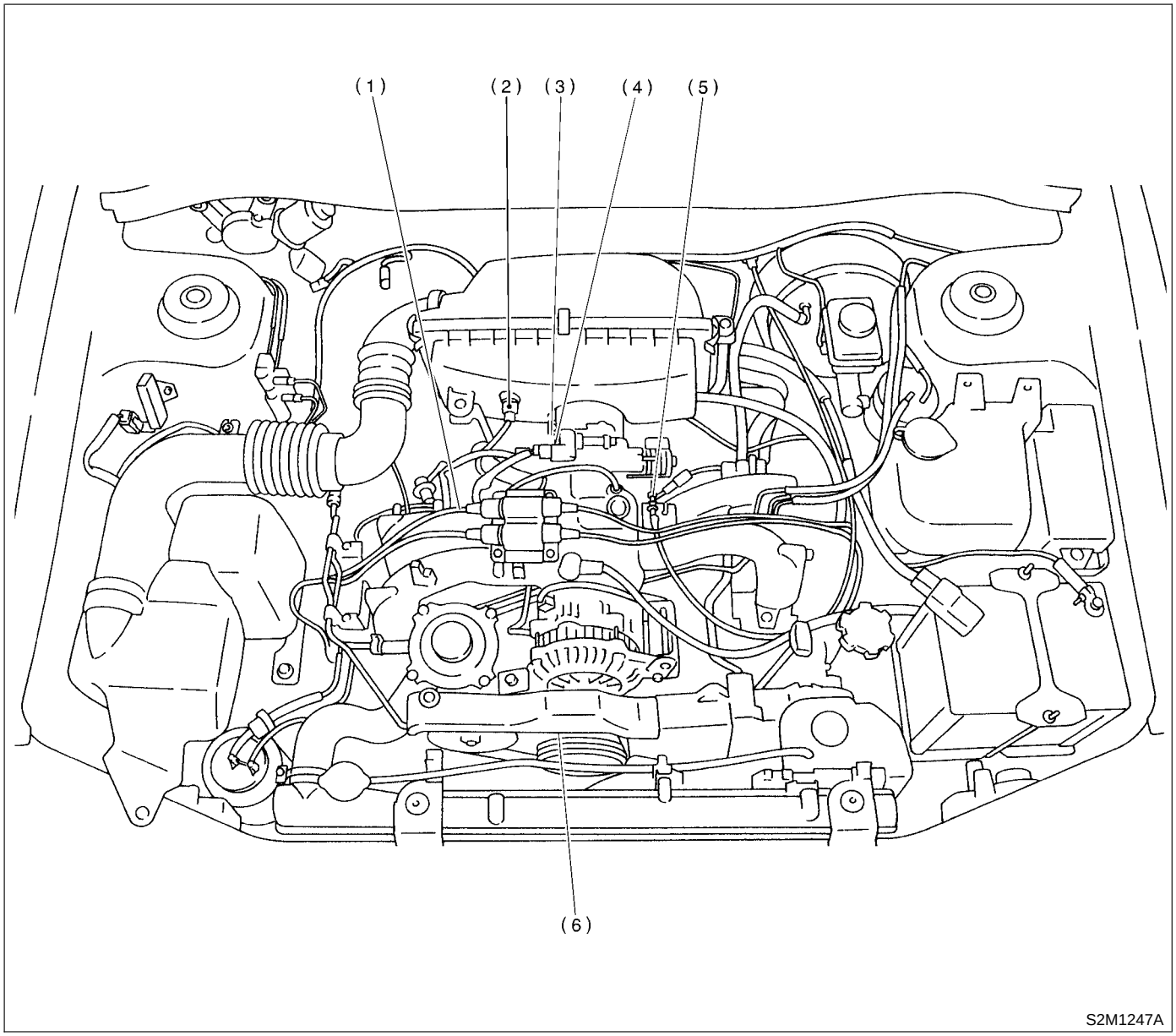

(1) Engine coolant temperature sensor
(2) Intake air temperature sensor
(3) Throttle position sensor
(4) Pressure sensor
(5) Knock sensor
(6) Crankshaft position sensor

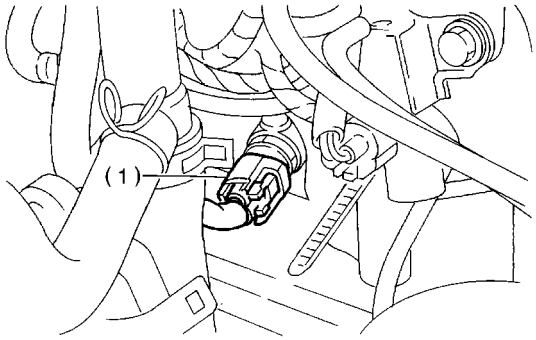

S2M1248A

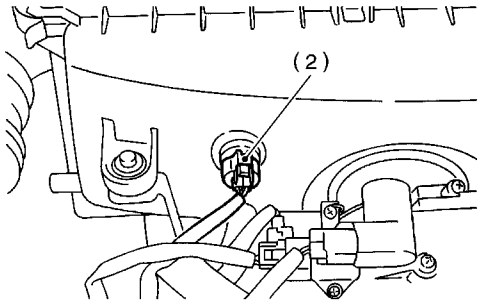

S2M1249A

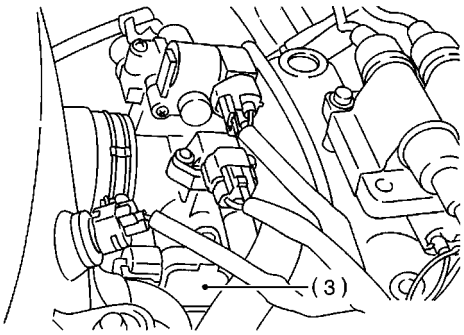

S2M1250A

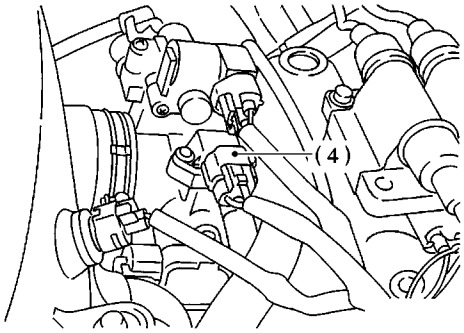

S2M1250B

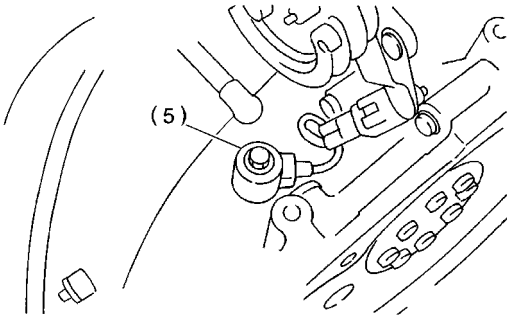

S2M0515B

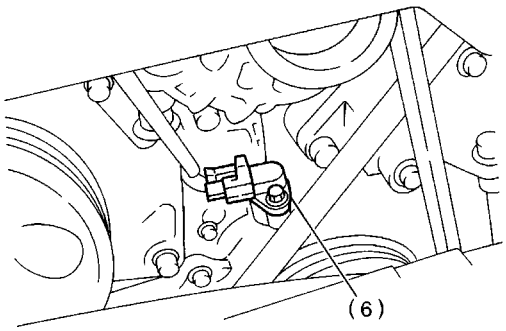

S2M0213K

AUSTRALIA SPEC. VEHICLES

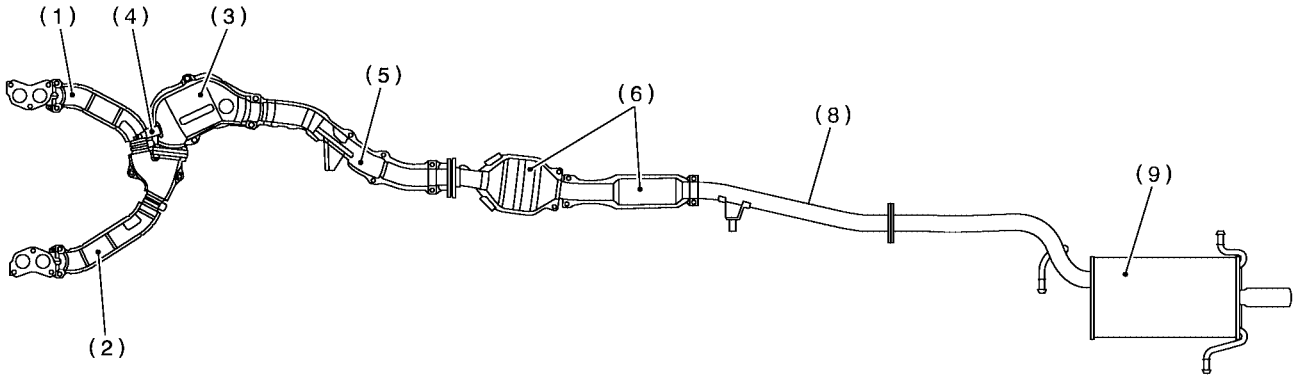

WITH CATALYTIC CONVERTER
(EXCEPT AUSTRALIA SPEC. VEHICLES)

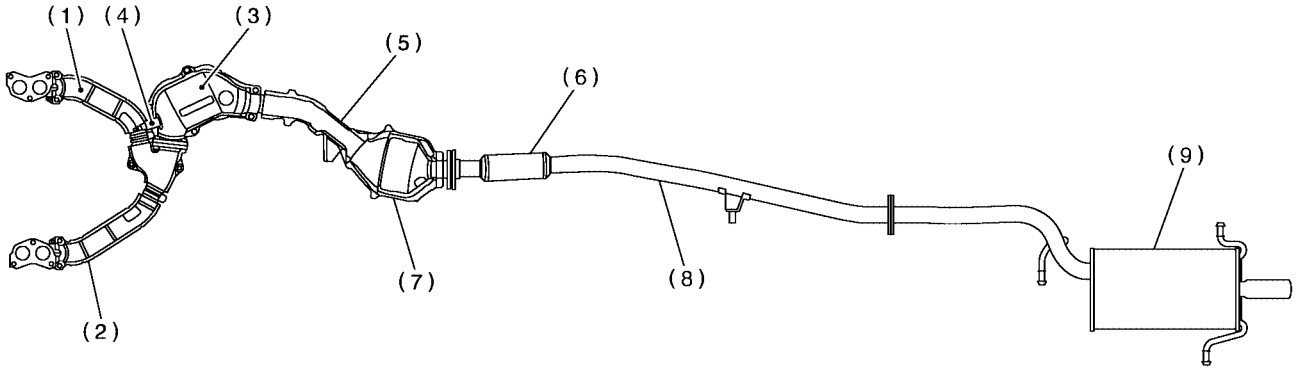

WITHOUT CATALYTIC CONVERTER

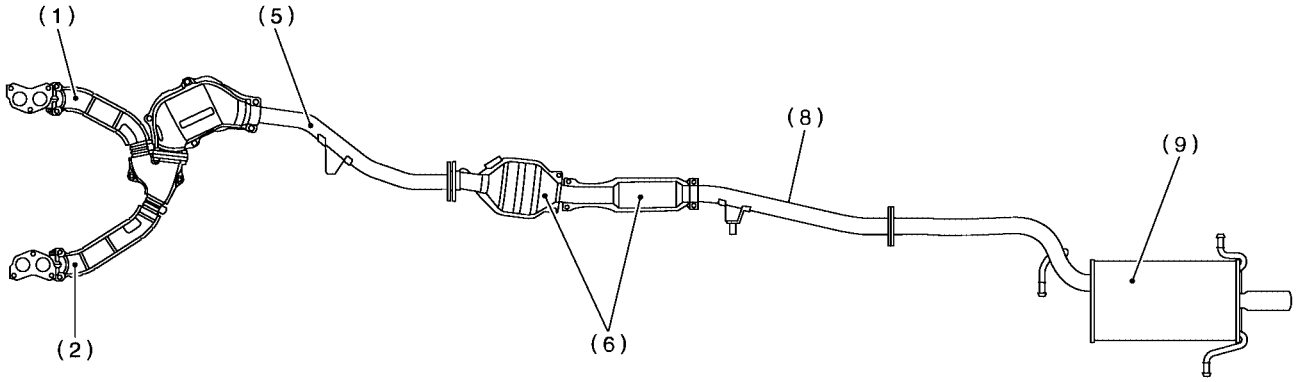

S2M2257A

(1) Front exhaust pipe RH
(2) Front exhaust pipe LH
(3) Front catalytic converter
(4) Oxygen sensor
(5) Center exhaust pipe
(6) Resonance chamber
(7) Rear catalytic converter
(8) Rear exhaust pipe
(9) Muffler

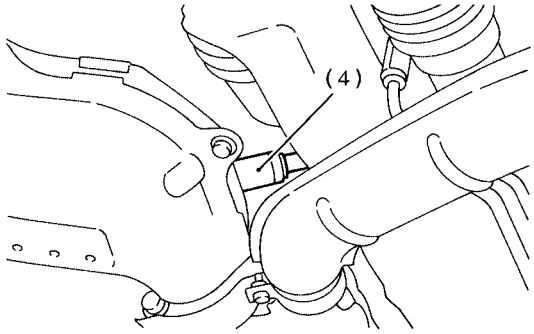

S2M0264C

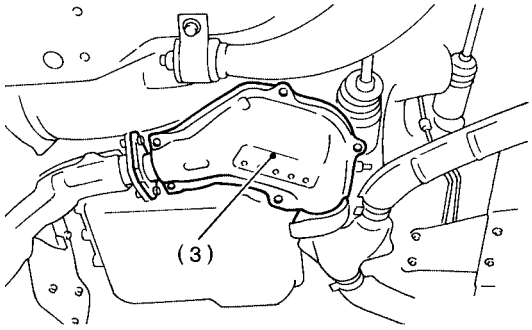

S2M0267C

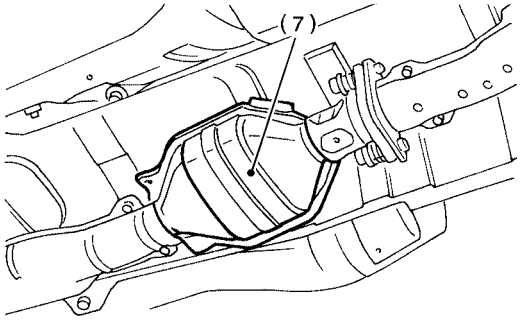

S2M0654C

3. SOLENOID VALVE, EMISSION CONTROL SYSTEM PARTS AND IGNITION SYSTEM PARTS S068507A1303

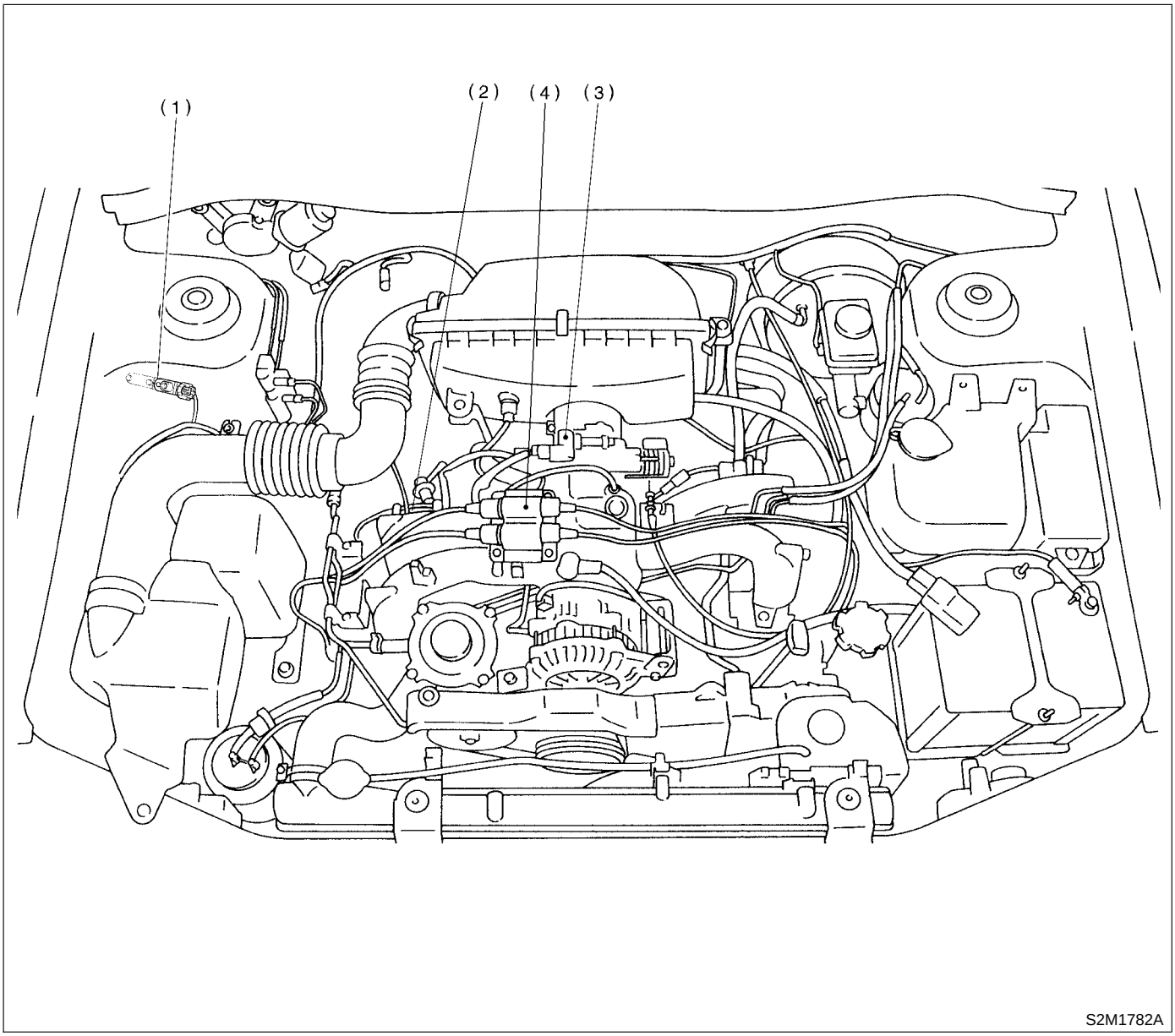

(1) CO resistor (General spec. vehicles)
(2) Purge control solenoid valve
(3) Idle air control solenoid valve
(4) Ignition coil and ignitor ASSY

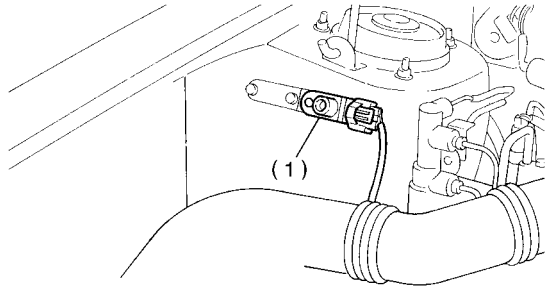

S2M1764A

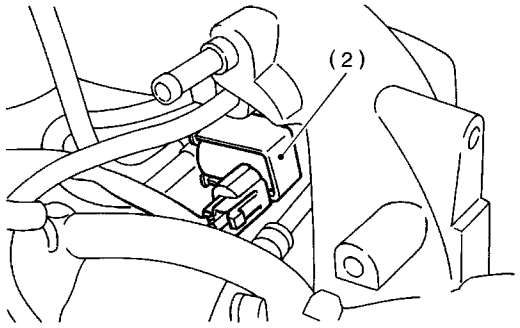

S2M1252A

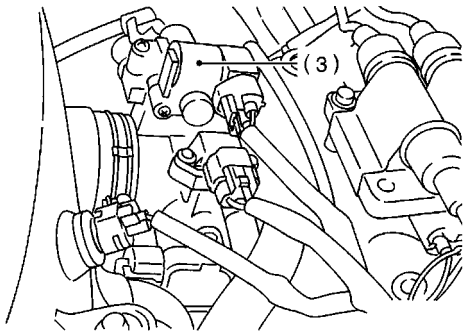

S2M1250C

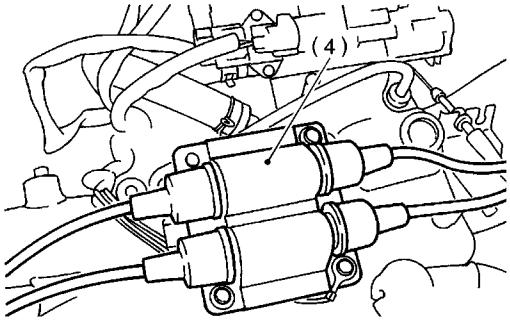

S2M1253A

ELECTRICAL COMPONENTS LOCATION

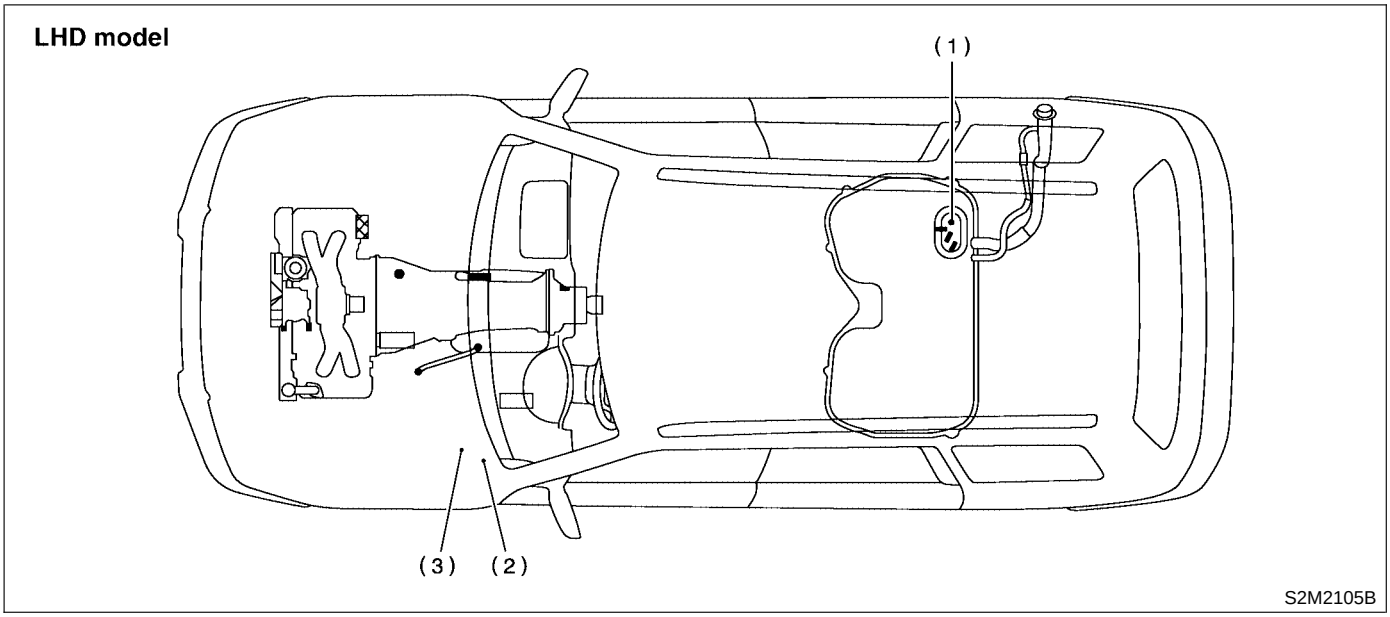

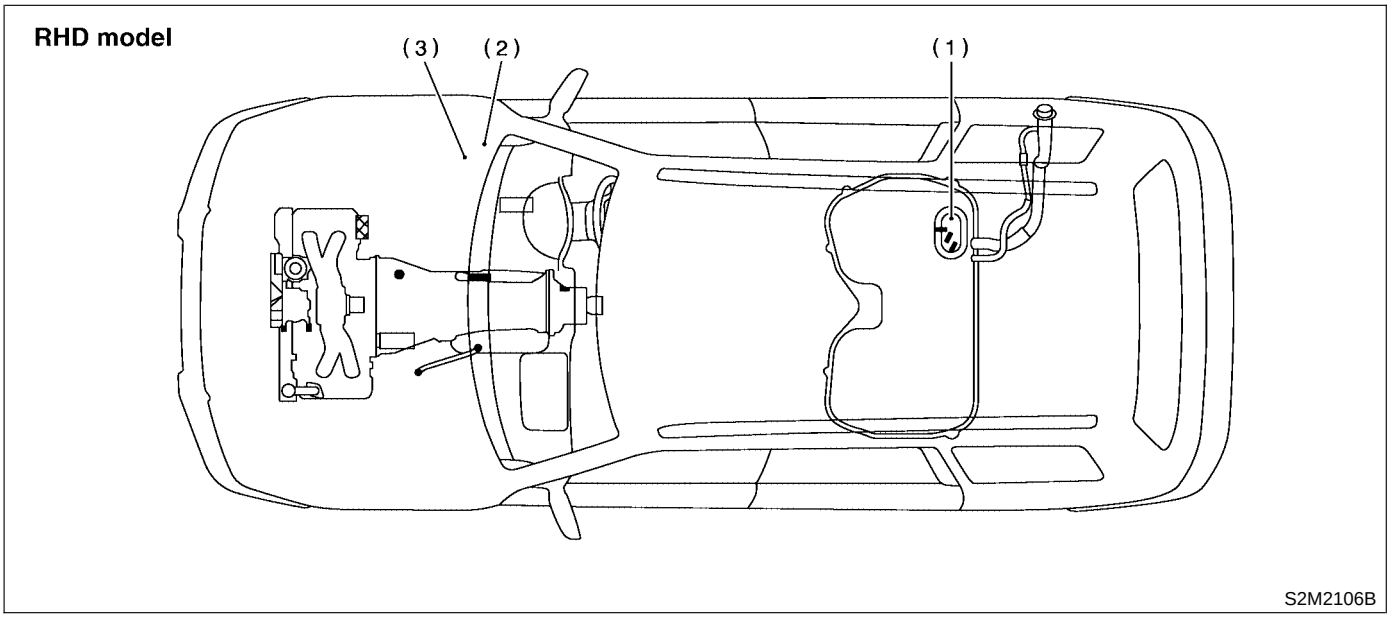

(1) Fuel pump (2) Main relay (3) Fuel pump relay

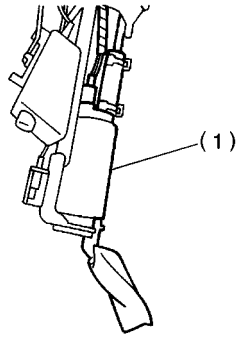

S2M0277B

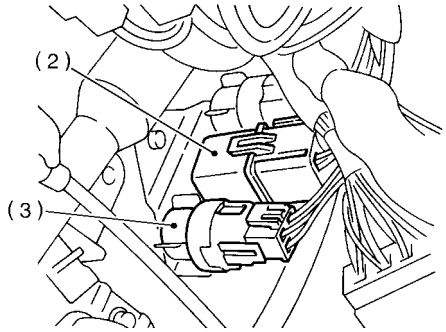

S2M0278C

5. Engine Control Module (ECM) I/O Signal S068526

A: ELECTRICAL SPECIFICATION S068526A08

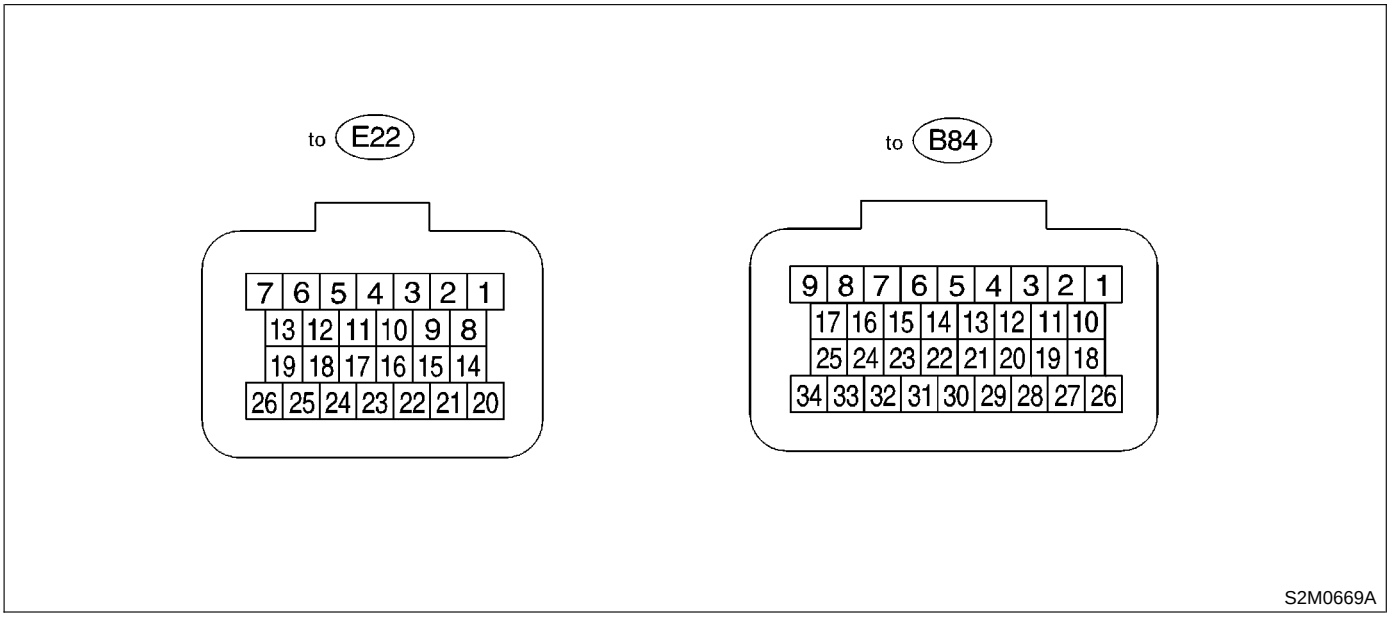

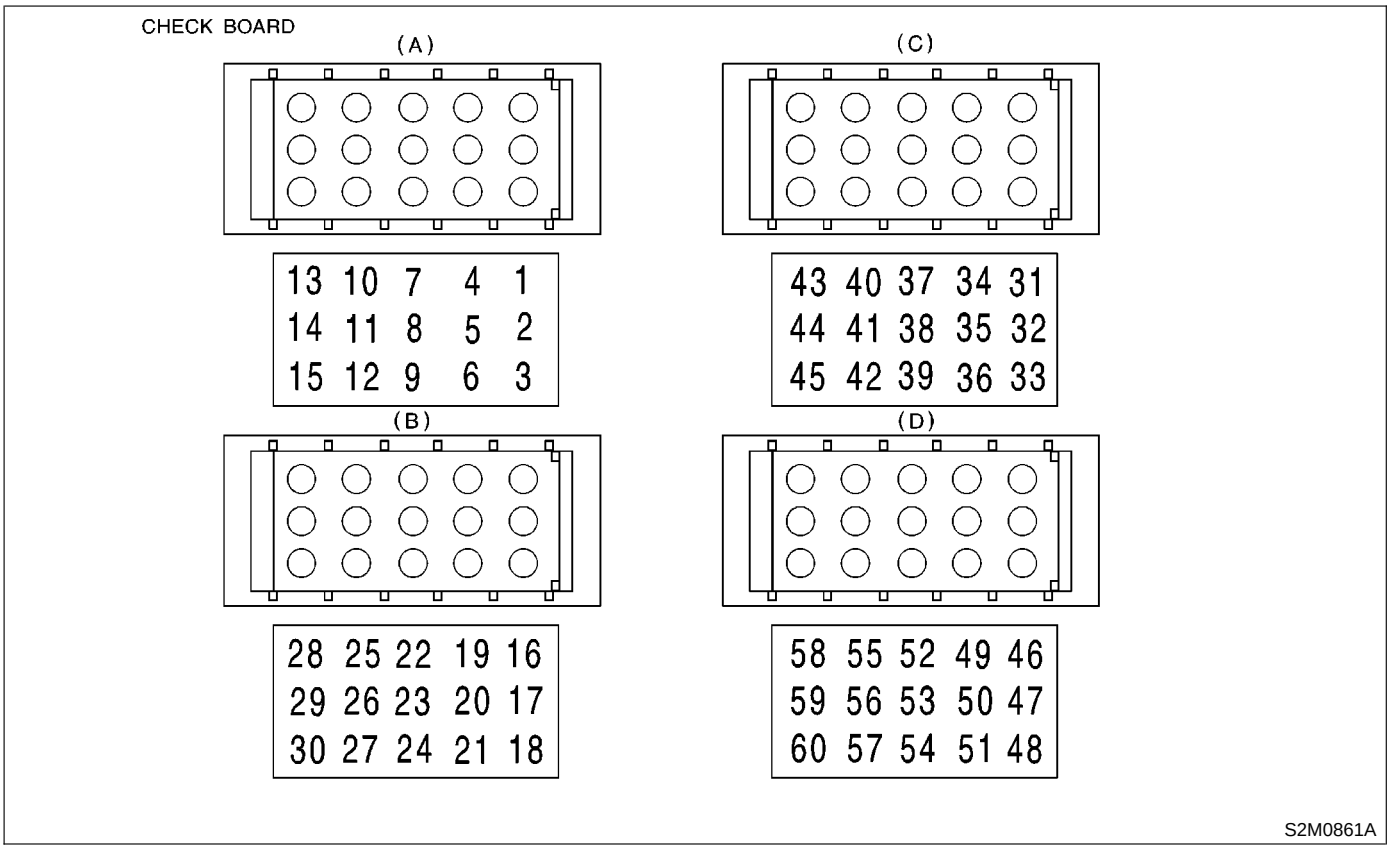

ENGINE CONTROL MODULE (ECM) I/O SIGNAL

Content		ECM		CHECK BOARD		Signal (V)		Note
		Connector No.	Terminal No.	Connector No.	Terminal No.	Ignition SW ON (Engine OFF)	Engine ON (Idling)	
Crankshaft position sensor	Signal (+)	E22	20	B	26	0	−7 to +7	Sensor output waveform
	Signal (−)	E22	14	B	19	0	0	—
	Shield	E22	21	B	25	0	0	—
Pressure sensor	Signal	E22	18	A	15	3.4 — 3.6	1.2 — 1.8	—
	Power supply	E22	25	B	21	5	5	—
	GND	E22	22	B	24	0	0	—
Throttle position sensor	Signal	E22	23	B	23	Fully closed: 0.2 — 1.0 Fully open: 4.2 — 4.7		—
	Power supply	E22	25	B	21	5	5	—
	GND	E22	22	B	24	0	0	—
Oxygen sensor	Signal	B84	22	D	47	0.6, or less	0 — 0.9	—
	Shield	B84	15	C	38	0	0	—
Engine coolant temperature sensor		E22	24	B	22	0.4 — 2.4	0.4 — 2.4	After warm-up
Vehicle speed sensor		B84	33	D	53	0 or 5	0 or 5	“5” and “0” are repeatedly displayed when vehicle is driven.
Intake air temperature sensor		E22	17	B	16	2.3 — 2.5	1.4 — 1.6	After warm-up
A/C switch		B84	27	D	59	ON: 10 — 13 OFF: 0	ON: 13 — 14 OFF: 0	—
Ignition switch		B84	28* 19	D	58* 50	10 — 13	13 — 14	—
Neutral position switch (MT)		B84	26	D	60	ON: 10 — 13 OFF: 0		● On MT vehicles; switch is ON when gear is in neutral position.
Neutral position switch (AT)						ST: 10 — 13 ON: 0 OFF: 13 — 14		● On AT vehicles; switch is ON when shift is in “N” or “P” position
Knock sensor	Signal	E22	16	B	17	2.5	2.5	—
	Shield	E22	21	B	25	0	0	
Test mode connector		B84	19* 28	D	50* 58	10 — 13	13 — 14	When connected: 0
Read memory connector		B84	20	D	49	10 — 13	13 — 14	When connected: 0
Back-up power supply		B84	34	D	52	10 — 13	13 — 14	Ignition switch “OFF”: 10 — 13
Control unit power supply		B84	9	B	27	10 — 13	13 — 14	—
			17	C	36			
Ignition control	# 1, # 2	E22	3	A	5	0	1 — 3.4	—
	# 3, # 4	E22	9	A	12	0	1 — 3.4	—
Fuel injector	# 1, # 2	E22	7	A	1	10 — 13	1 — 14	Waveform
	# 3, # 4	E22	6	A	2	10 — 13	1 — 14	Waveform

ENGINE CONTROL MODULE (ECM) I/O SIGNAL

Content	ECM		CHECK BOARD		Signal (V)		Note
	Connector No.	Terminal No.	Connector No.	Terminal No.	Ignition SW ON (Engine OFF)	Engine ON (Idling)	
Idle air control solenoid valve	E22	4	A	4	—	1 — 13	Waveform
Fuel pump relay control	B84	3	C	33	ON: 0.5, or less OFF: 10 — 13	0.5, or less	—
A/C relay control	B84	11	C	42	ON: 0.5, or less OFF: 10 — 13	ON: 0.5, or less OFF: 13 — 14	—
Radiator fan relay 1	B84	2	C	34	ON: 0.5, or less OFF: 10 — 13	ON: 0.5, or less OFF: 13 — 14	—
Radiator fan relay 2	B84	10	C	43	ON: 0.5, or less OFF: 10 — 13	ON: 0.5, or less OFF: 13 — 14	With A/C vehicles only
Self-shutoff control	B84	5	C	31	10 — 13	13 — 14	—
Malfunction indicator lamp	B84	13	C	40	—	—	Light “ON”: 1, or less Light “OFF”: 10 — 14
Engine speed output	B84	6	B	30	—	0 — 13, or more	Waveform
Torque control signal	B84	18	D	51	8	8 — 9	—
VCC signal	B84	1	C	35	5	5	AT and without catalyst vehicles only
AT load signal	B84	29	D	57	3.4 — 3.6	1.2 — 1.8	—
Purge control solenoid valve	E22	5	A	3	ON: 1, or less OFF: 10 — 13	13 — 14	● Waveform ● When connecting test mode connector
Power steering pressure switch	E22	26	B	20	10 — 13	ON: 0 OFF: 13 — 14	—
MT/AT identification	B84	16	C	37	MT: 0 AT: 5	MT: 0 AT: 5	—
Select monitor signal	B84	24	C	45	—	—	—
		32	D	54			
GND (ignition system)	E22	10	A	11	0	0	—
GND (power supply)	E22	11	A	10	0	0	—
		12		9			
GND (control systems)	E22	21	B	25	0	0	—
Immobilizer serial line	B84	23	D	46	—	—	—
		31		55			

*: RHD

B: HOW TO CHECK I/O SIGNAL FOR ECM S068526H57

● When checking I/O signal, connect ST between ECM and ECM connector.
1) Prepare the ST.
ST 498307600 CHECK BOARD KIT

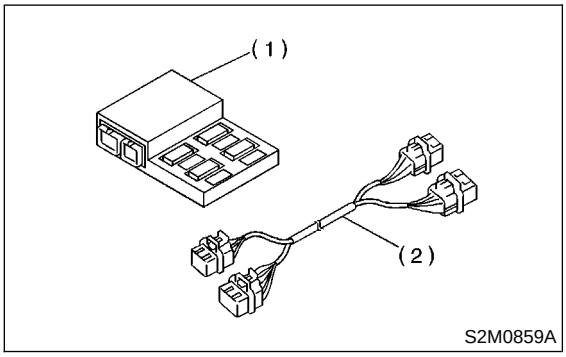

(1) CHECK BOARD
(2) CHECK BOARD ADAPTER

2) Turn ignition switch to OFF.
3) Disconnect connectors from ECM.
4) Connect connectors of CHECK BOARD ADAPTER to ECM and CHECK BOARD.
5) Connect engine harness and bulkhead harness connectors to CHECK BOARD.

6. Subaru Select Monitor S068503

A: OPERATION S068503A16

1. HOW TO USE SUBARU SELECT MONITOR S068503A1601

1) Prepare Subaru Select Monitor kit.

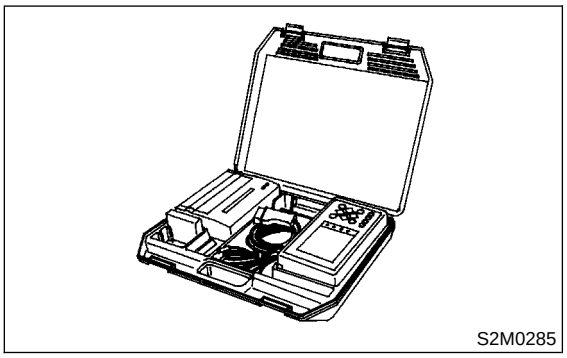

2) Connect diagnosis cable to Subaru Select Monitor.
3) Insert cartridge into Subaru Select Monitor.

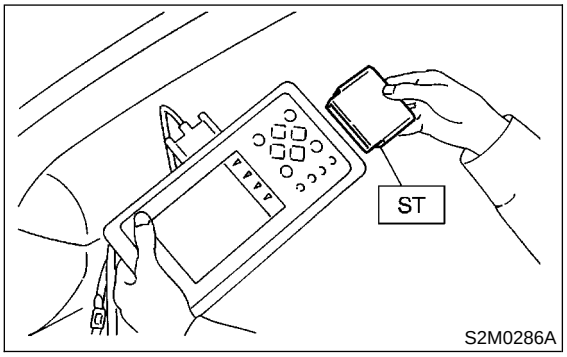

4) Connect Subaru Select Monitor to data link connector.
   (1) Data link connector located in the lower portion of the instrument panel (on the driver's side).

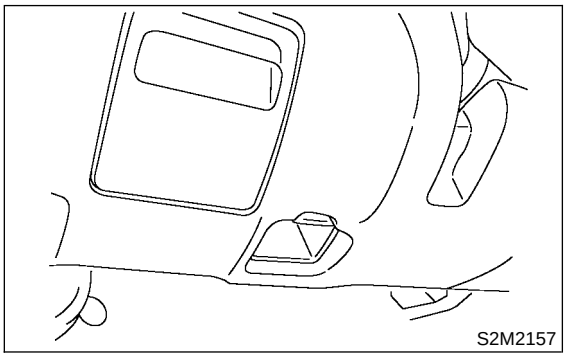

   (2) Connect diagnosis cable to data link connector.

CAUTION:
Do not connect scan tools except for Subaru Select Monitor.

5) Turn ignition switch to ON (engine OFF) and Subaru Select Monitor switch to ON.

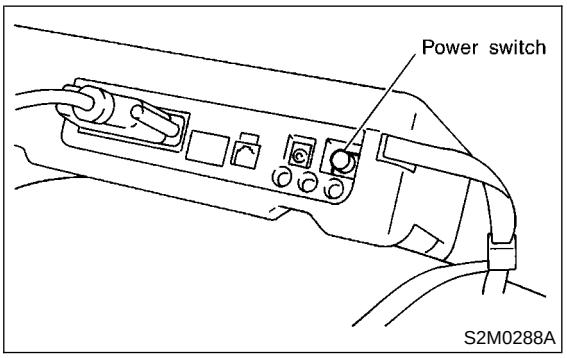

6) Using Subaru Select Monitor, call up diagnostic trouble code(s) and various data, then record them.

2. READ DIAGNOSTIC TROUBLE CODE (DTC) FOR ENGINE. S068503A1602

Refer to Read Diagnostic Trouble Code for information about how to indicate DTC. <Ref. to EN(SOHCw/oOBD)-27 Read Diagnostic Trouble Code.>

3. READ CURRENT DATA SHOWN ON DISPLAY. S068503A1603

1) On the ≪Main Menu≫ display screen, select the {2. Each System Check} and press the [YES] key.
2) On the ≪System Selection Menu≫ display screen, select the {Engine Control System} and press the [YES] key.
3) Press the [YES] key after displayed the information of engine type.
4) On the ≪Engine Diagnosis≫ display screen, select the {1. Current Data Display & Save} and press the [YES] key.
5) On the ≪Data Display Menu≫ display screen, select the {1. 12 Data Display} and press the [YES] key.
6) Using the scroll key, move the display screen up or down until the desired data is shown.

- A list of the support data is shown in the following table.

Contents	Unit of measure
Battery voltage	V
Vehicle speed signal	km/h or MPH
Engine speed signal	rpm
Engine coolant temperature signal	°C or °F
Ignition timing signal	deg
Throttle position signal	%
Throttle position signal	V
Injection pulse width	ms
Idle air control signal	%
Engine load data	%
Front oxygen sensor output signal	V
A/F correction coefficient	%
Knock sensor signal	deg
CO resistor	V
Intake manifold absolute/relative pressure signal	mmHg or kPa or inHg
Intake air temperature signal	°C or °F
Canister purge control solenoid valve duty ratio	%
Idle air control solenoid valve current	mA
Ignition switch signal	ON or OFF
Test mode connector signal	ON or OFF
Neutral position switch signal	ON or OFF
Air conditioning switch signal	ON or OFF
Air conditioning relay signal	ON or OFF
Radiator main fan relay signal	ON or OFF
Fuel pump relay signal	ON or OFF
Knocking signal	ON or OFF
Radiator sub fan relay signal	ON or OFF
Engine torque control signal	ON or OFF
Front oxygen sensor rich signal	ON or OFF
Crankshaft position sensor signal	ON or OFF
Electrical load signal	ON or OFF
Read memory connector signal	ON or OFF
Power steering pressure signal	ON or OFF
AT vehicle ID signal	ON or OFF
Idle switch	ON or OFF
Canister purge control solenoid valve	ON or OFF
Torque permission signal	ON or OFF

NOTE:
For detailed operation procedure, refer to the SUBARU SELECT MONITOR OPERATION MANUAL.

4. LED OPERATION MODE FOR ENGINE S068503A1604

Contents	Message	LED “ON” requirements
Ignition switch signal	ON or OFF	When ignition switch is turned ON.
Test mode connector signal	ON or OFF	When test mode connector is connected.
Neutral position switch signal	ON or OFF	When neutral position signal is entered.
Air conditioning switch signal	ON or OFF	When air conditioning switch is turned ON.
Air conditioning relay signal	ON or OFF	When air conditioning relay is in function.
Radiator main fan relay signal	ON or OFF	When radiator main fan relay is in function.
Fuel pump relay signal	ON or OFF	When fuel pump relay is in function.
Knocking signal	ON or OFF	When knocking signal is entered.
Radiator sub fan relay signal	ON or OFF	When radiator sub fan relay is in function.
Engine torque control signal	ON or OFF	When engine torque control signal is entered.
Front oxygen sensor rich signal	ON or OFF	When front oxygen sensor mixture ratio is rich.
Crankshaft position sensor signal	ON or OFF	When crankshaft position sensor signal is entered.
Electrical load signal	ON or OFF	When the lighting switch, blower fan switch or rear defogger switch is turned ON.
Read memory connector signal	ON or OFF	When read memory connector is connected.
Power steering pressure signal	ON or OFF	When steering wheel is turned.
AT vehicle ID signal	ON or OFF	When AT identification signal is entered.
Idle switch	ON or OFF	When throttle sensor sends signal that throttle opening angle is in idle position.
Canister purge control solenoid valve	ON or OFF	When canister purge control solenoid valve is in function.
Torque permission signal	ON or OFF	When torque permission signal is entered.

NOTE:
For detailed operation procedure, refer to the SUBARU SELECT MONITOR OPERATION MANUAL.

7. Read Diagnostic Trouble Code S068508

A: OPERATION S068508A16

1. WITH SUBARU SELECT MONITOR S068508A1601

1) On the ≪Main Menu≫ display screen, select the {Each System Check} and press the [YES] key.
2) On the ≪System Selection Menu≫ display screen, select the {Engine Control System} and press the [YES] key.
3) Press the [YES] key after displayed the information of engine type.
4) On the ≪Engine Diagnosis≫ display screen, select the {Diagnostic Code(s) Display} and press the [YES] key.
5) On the ≪Diagnostic Code(s) Display≫ display screen, select the {Current Diagnostic Code(s)} or {History Diagnostic Code(s)} and press the [YES] key.

NOTE:
- For detailed operation procedure, refer to the SUBARU SELECT MONITOR OPERATION MANUAL.
- For detailed concerning diagnostic trouble codes, refer to the List of Diagnostic Trouble Code (DTC). <Ref. to EN(SOHCw/oOBD)-65 LIST, LIST of Diagnostic Trouble Code (DTC).>

2. WITHOUT SUBARU SELECT MONITOR S068508A1602

No.	Step	Check	Yes	No
1	**CHECK STATUS OF CHECK ENGINE MALFUNCTION INDICATOR LAMP (MIL).** 1) Turn ignition switch to OFF. 2) Connect read memory connector. <Ref. to EN(SOHCw/oOBD)-10 LOCATION, Electrical Components Location.> 3) Turn ignition switch to ON.	Does the MIL come on?	Go to step **2**.	Check the following and repair if necessary. NOTE: ● Open or short circuit in engine control module power supply or ground line ● Open or short circuit in CHECK ENGINE malfunction indicator lamp
2	**CHECK DIAGNOSTIC TROUBLE CODE (DTC).**	Does the MIL indicate diagnostic trouble code (DTC)?	Record diagnostic trouble code (DTC). Then turn ignition switch to OFF, disconnect read memory connector.	Complete read diagnostic trouble code. Turn ignition switch to OFF and disconnect read memory connector.

The CHECK ENGINE malfunction indicator lamp (MIL) flashes the code corresponding to the faulty parts. The long segment (1.3 seconds ON) indicates a “ten”, and the short segment (0.2 seconds ON) signifies “one”. And middle segment (0.5 seconds ON) means OK code.

NOTE:
● For detailed concerning diagnostic trouble codes, refer to the List of Diagnostic Trouble Code (DTC). <Ref. to EN(SOHCw/oOBD)-65 LIST, LIST of Diagnostic Trouble Code (DTC).>

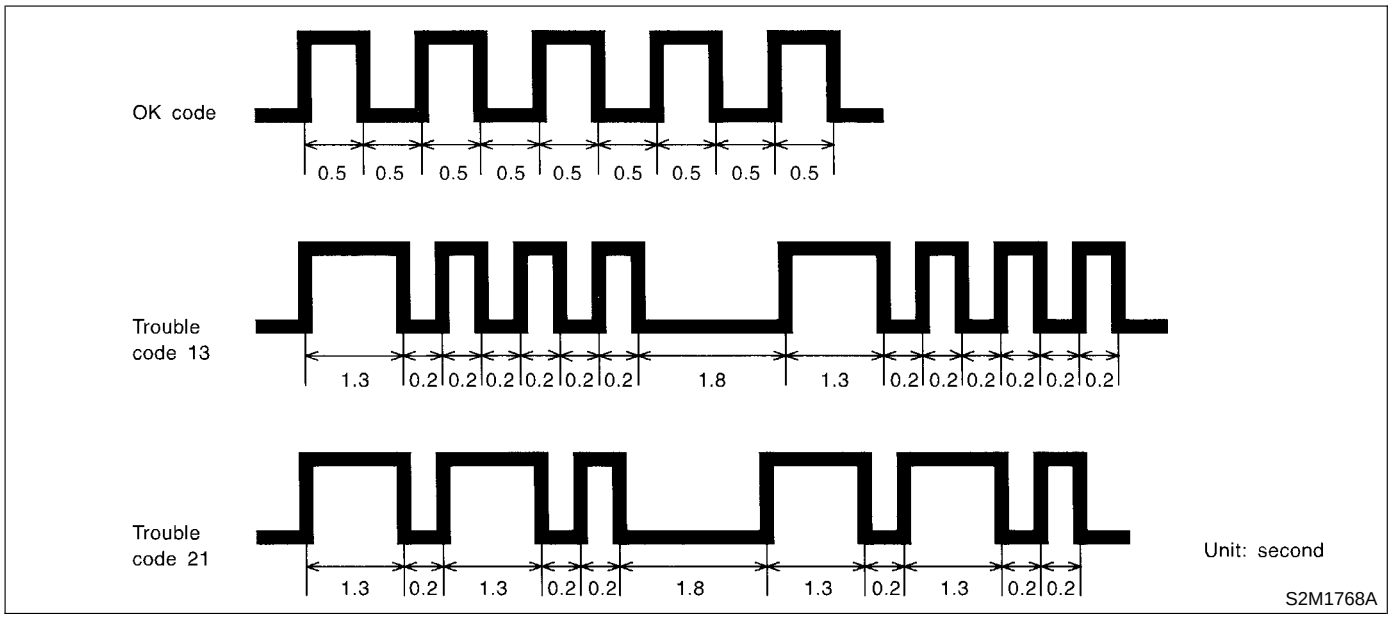

8. Inspection Mode S068510

A: OPERATION S068510A16

1. PREPARATIONS FOR THE INSPECTION MODE S068510A1601

Raise the vehicle using a garage jack and place on safety stands or drive the vehicle onto free rollers.

WARNING:
- **Before raising the vehicle, ensure parking brakes are applied.**
- **Do not use a pantograph jack in place of a safety stand.**
- **Secure a rope or wire to the front and rear towing or tie-down hooks to prevent the lateral runout of front wheels.**
- **Do not abruptly depress/release clutch pedal or accelerator pedal during works even when engine is operating at low speeds since this may cause vehicle to jump off free rollers.**
- **In order to prevent the vehicle from slipping due to vibration, do not place any wooden blocks or similar items between the safety stands and the vehicle.**
- **Since the rear wheels will also rotate, do not place anything near them. Also, make sure that nobody goes in front of the vehicle.**

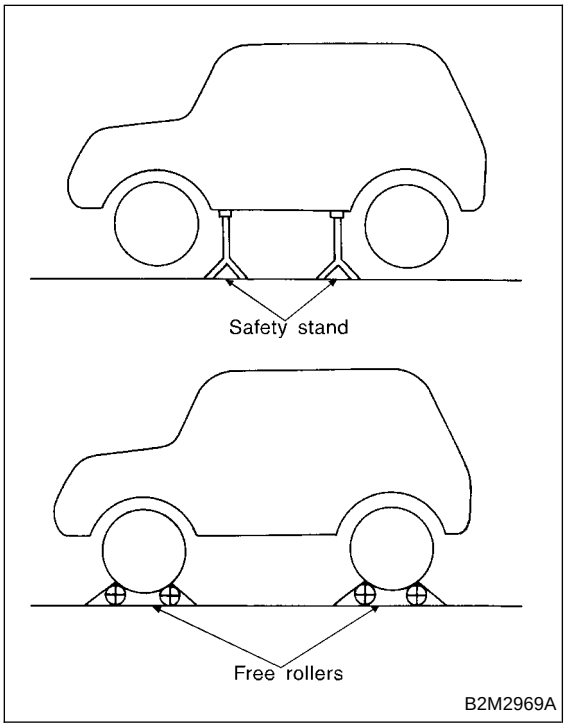

2. WITH SUBARU SELECT MONITOR

S068510A1602

After performing diagnostics and clearing the memory, check for any remaining unresolved trouble data.

1) Connect test mode connector (green).

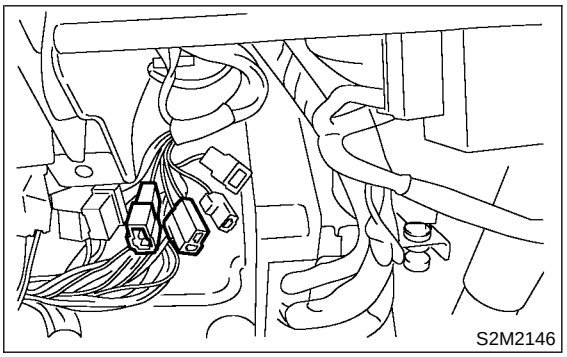

2) Connect Subaru select monitor to data link connector. <Ref. to EN(SOHCw/oOBD)-10 LOCATION, Electrical Components Location.>

3) Turn ignition switch to ON (engine OFF) and Subaru select monitor switch to ON.

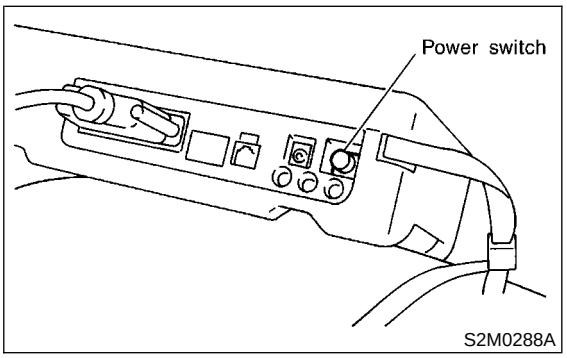

4) On the ≪Main Menu≫ display screen, select the {2. Each System Check} and press the [YES] key.

5) On the ≪System Selection Menu≫ display screen, select the {Engine Control System} and press the [YES] key.

6) Press the [YES] key after displayed the information of engine type.

7) On the ≪Engine Diagnosis≫ display screen, select the {6. Dealer Check Mode Procedure} and press the [YES] key.

8) When the “Perform Inspection (Dealer Check) Mode?” is shown on the display screen, press the [YES] key.

9) Perform subsequent procedures as instructed on the display screen.

- If trouble still remains in the memory, the corresponding diagnostic trouble code (DTC) appears on the display screen.

NOTE:
● For detailed operation procedure, refer to the SUBARU SELECT MONITOR OPERATION MANUAL.
● For detailed concerning diagnostic trouble codes, refer to the DIAGNOSTIC TROUBLE CODE (DTC) LIST. <Ref. to EN(SOHCw/oOBD)-65 LIST, List of Diagnostic Trouble Code (DTC).>

● On AWD vehicles, release the parking brake.
● The speed difference between front and rear wheels may light either the ABS warning light, but this indicates no malfunctions. When engine control diagnosis is finished, perform the ABS memory clearance procedure of self-diagnosis system.

3. WITHOUT SUBARU SELECT MONITOR S068510A1603

No.	Step	Check	Yes	No
1	**CHECK STATUS OF CHECK ENGINE MALFUNCTION INDICATOR LAMP (MIL).** 1) Start and warm-up the engine. 2) Turn ignition switch to OFF. 3) Set shift lever to neutral position (MT vehicles), or set selector lever to “P” position (AT vehicles). 4) Connect test mode connector (green). 5) Turn ignition switch to ON.	Does the MIL come on?	Go to step **2**.	Check the following and repair if necessary. NOTE: ● Open or short circuit in engine control module power supply or ground line ● Open or short circuit in CHECK ENGINE malfunction indicator lamp
2	**CHECK DIAGNOSTIC TROUBLE CODE (DTC).** 1) Set selector lever to “N” position, and then set selector lever to “P” position again (AT vehicles only). 2) Start the engine.	Does the MIL indicate diagnostic trouble code (DTC)?	Record diagnostic trouble code (DTC) and inspect using DTC. <Ref. to EN(SOHCw/oOBD)-68 Diagnostic Procedure with Diagnostic Trouble Code (DTC).>	Go to step **3**.
3	**CHECK DIAGNOSTIC TROUBLE CODE (DTC).** 1) Drive vehicle at speed greater than 11 km/h (7 MPH) for at least one minute. 2) Warm-up engine above 2,000 rpm.	Does the MIL indicate diagnostic trouble code (DTC)?	Record diagnostic trouble code (DTC) and inspect using DTC. <Ref. to EN(SOHCw/oOBD)-68 Diagnostic Procedure with Diagnostic Trouble Code (DTC).>	Turn ignition switch to OFF. Disconnect test mode connector. Complete inspection mode. NOTE: When on-board diagnosis system indicates no trouble, the trouble is in a different symptom.

9. Clear Memory Mode S068513

A: OPERATION S068513A16

1. WITH SUBARU SELECT MONITOR S068513A1601

1) On the ≪Main Menu≫ display screen, select the {2. Each System Check} and press the [YES] key.
2) On the ≪System Selection Menu≫ display screen, select the {Engine Control System} and press the [YES] key.
3) Press the [YES] key after displayed the information of engine type.
4) On the ≪Engine Diagnosis≫ display screen, select the {Clear Memory} and press the [YES] key.
5) When the 'Done' and 'Turn Ignition Switch OFF' are shown on the display screen, turn the Subaru Select Monitor and ignition switch to OFF.

NOTE:
- After the memory has been cleared, the ISC must be initialized. To do this, turn the ignition switch to the ON position. Wait 3 seconds before starting the engine.
- For detailed operation procedure, refer to the SUBARU SELECT MONITOR OPERATION MANUAL.

2. WITHOUT SUBARU SELECT MONITOR S068513A1602

No.	Step	Check	Yes	No
1	**CHECK STATUS OF CHECK ENGINE MALFUNCTION INDICATOR LAMP (MIL).** 1) Turn ignition switch to OFF. 2) Set shift lever to neutral position (MT vehicles), or set selector lever to "P" position (AT vehicles). 3) Connect test mode connector and read memory connector. 4) Turn ignition switch to ON.	Does the MIL come on?	Go to step **2**.	Check the following and repair if necessary. NOTE: ● Open or short circuit in engine control module power supply or ground line ● Open or short circuit in CHECK ENGINE malfunction indicator lamp
2	**CHECK DIAGNOSTIC TROUBLE CODE (DTC).** 1) Set selector lever to "N" position, and then set selector lever to "P" position again (AT vehicles only). 2) Start the engine. 3) Drive vehicle at speed greater than 11 km/h (7 MPH) for at least one minute. 4) Warm-up engine above 2,000 rpm.	Does the MIL indicate diagnostic trouble code (DTC)? <Ref. to EN(SOHCw/oOBD)-65 LIST, List of Diagnostic Trouble Code (DTC).>	Record diagnostic trouble code. Repair the trouble cause. <Ref. to EN(SOHCw/oOBD)-68 Diagnostic Procedure with Diagnostic Trouble Code (DTC).>	Turn ignition switch to OFF. Disconnect read memory connector and test mode connector. Complete clear memory mode.

10. Compulsory Valve Operation Check Mode S068528

A: OPERATION S068528A16

1) Connect test mode connector at the lower portion of instrument panel (on the driver's side), to the side of the center console box.

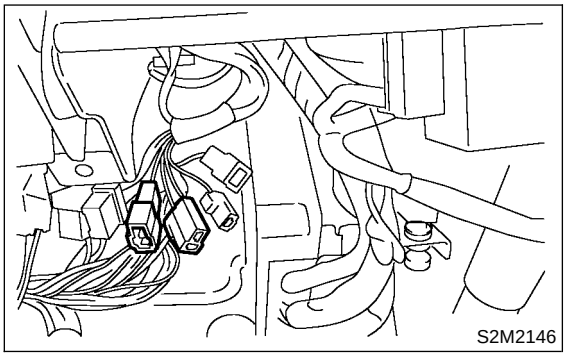

2) Each valve functions when ignition switch is turned to ON (engine OFF).
- A list of the support portion is shown in the following table.

Contents
Compulsory fuel pump relay operation check
Compulsory purge control solenoid valve operation check
Compulsory radiator fan relay operation check
Compulsory air conditioning relay operation check

11. Engine Malfunction Indicator Lamp (MIL) S068653

A: PROCEDURE S068653E45

1. Activation of check engine malfunction indicator lamp (MIL). <Ref. to EN(SOHCw/oOBD)-33 ACTIVATION OF CHECK ENGINE MALFUNCTION INDICATOR LAMP (MIL), Engine Malfunction Indicator Lamp (MIL).>
↓
2. Check engine malfunction indicator lamp (MIL) does not come on. <Ref. to EN(SOHCw/oOBD)-34 CHECK ENGINE MALFUNCTION INDICATOR LAMP (MIL) DOES NOT COME ON., Engine Malfunction Indicator Lamp (MIL).>
↓
3. Check engine malfunction indicator lamp (MIL) does not go off. <Ref. to EN(SOHCw/oOBD)-38 CHECK ENGINE MALFUNCTION INDICATOR LAMP (MIL) DOES NOT GO OFF., Engine Malfunction Indicator Lamp (MIL).>
↓
4. Check engine malfunction indicator lamp (MIL) does not blink at a cycle of 3 Hz. <Ref. to EN(SOHCw/oOBD)-40 CHECK ENGINE MALFUNCTION INDICATOR LAMP (MIL) DOES NOT BLINK AT A CYCLE OF 3 HZ., Engine Malfunction Indicator Lamp (MIL).>
↓
5. Check engine malfunction indicator lamp (MIL) remains blinking at a cycle of 3 Hz. <Ref. to EN(SOHCw/oOBD)-44 CHECK ENGINE MALFUNCTION INDICATOR LAMP (MIL) REMAINS BLINKING AT A CYCLE OF 3 HZ., Engine Malfunction Indicator Lamp (MIL).>

B: ACTIVATION OF CHECK ENGINE MALFUNCTION INDICATOR LAMP (MIL) S068653E89

1) When ignition switch is turned to ON (engine off), the CHECK ENGINE malfunction indicator lamp (MIL) in the combination meter illuminates.

NOTE:
If the MIL does not illuminate, perform diagnostics of the CHECK ENGINE light circuit or the combination meter circuit. <Ref. to IDI-15 Combination Meter Assembly.>

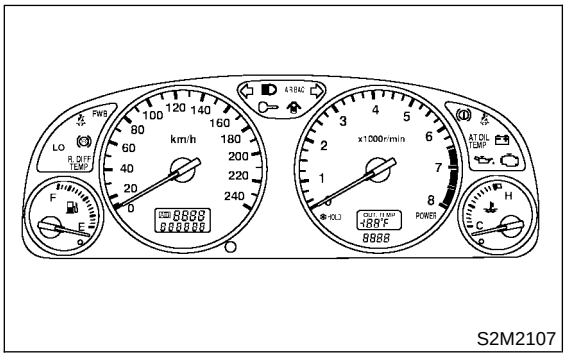

S2M2107

2) After starting the engine, the MIL goes out. If it does not, either the engine or the emission control system is malfunctioning. <Ref. to EN(SOHCw/oOBD)-2 PROCEDURE, Basic Diagnostic Procedure.>

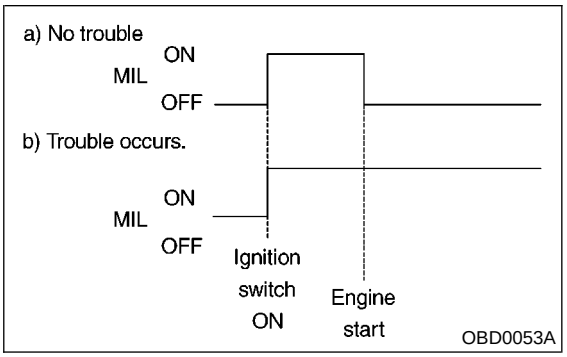

3) When ignition switch is turned to ON (engine off) or to “START” with the test mode connector connected, the MIL blinks at a cycle of 3 Hz.

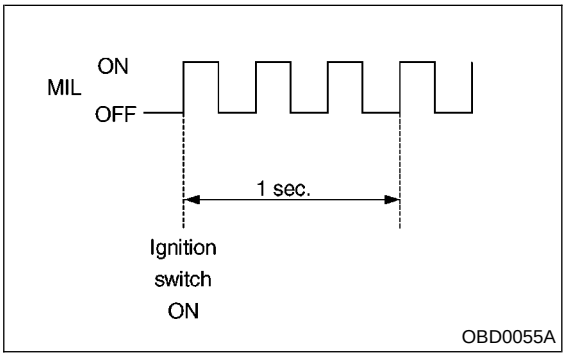

C: CHECK ENGINE MALFUNCTION INDICATOR LAMP (MIL) DOES NOT COME ON. S068653E90

- **DIAGNOSIS:**
  - The CHECK ENGINE malfunction indicator lamp (MIL) circuit is open or shorted.
- **TROUBLE SYMPTOM:**
  - When ignition switch is turned ON (engine OFF), MIL does not come on.
- **WIRING DIAGRAM:**

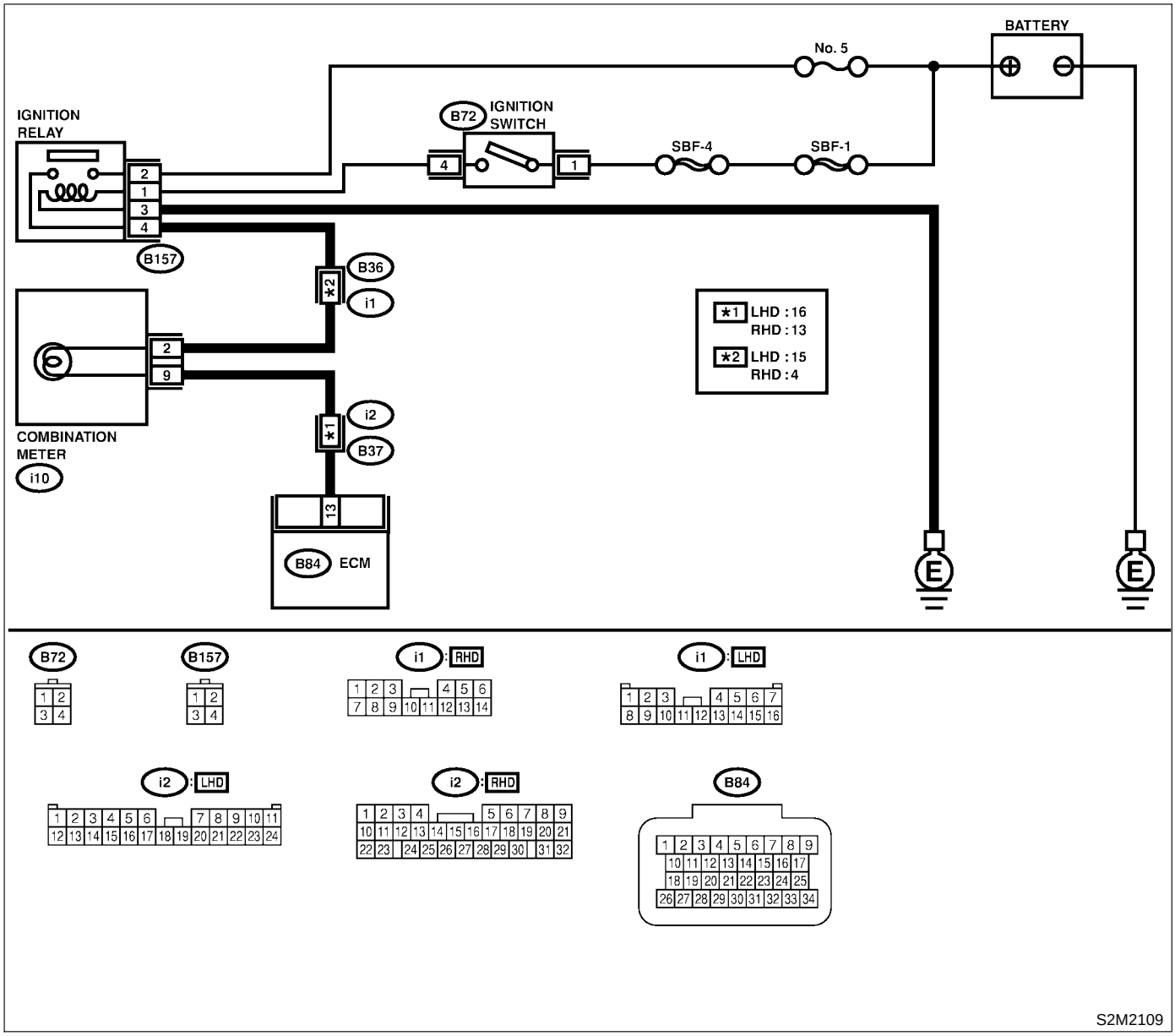

No.	Step	Check	Yes	No
1	**CHECK OUTPUT SIGNAL FROM ECM.** 1) Disconnect connector from ECM, then connect check board. <Ref. to EN(SOHCw/oOBD)-23, HOW TO CHECK I/O SIGNAL FOR ECM, Engine Control Module (ECM) I/O Signal.> 2) Turn ignition switch to ON. 3) Measure voltage between ECM connector and engine ground. ***Connector & terminal*** ***(C) No. 40 (+) — Engine ground (−):***	Is the voltage less than 1 V?	Go to step **4**.	Go to step **2**.
2	**CHECK POOR CONTACT.**	Does the MIL come on when shaking or pulling ECM connector and harness?	Repair poor contact in ECM connector.	Go to step **3**.
3	**CHECK ECM CONNECTOR.**	Is ECM connector correctly connected?	Replace ECM. <Ref. to FU(SOHCw/oOBD)-38, Engine Control Module.>	Repair connection of ECM connector.
4	**CHECK HARNESS BETWEEN COMBINATION METER AND ECM CONNECTOR.** 1) Turn ignition switch to OFF. 2) Remove combination meter. <Ref. to IDI-15, Combination Meter Assembly.> 3) Disconnect connector from ECM and combination meter. 4) Measure resistance of harness between ECM and combination meter connector. ***Connector & terminal*** ***(B84) No. 13 — (i10) No. 9:***	Is resistance less than 1 Ω?	Go to step **5**.	Repair harness and connector. NOTE: In this case, repair the following: ● Open circuit in harness between ECM and combination meter connector ● Poor contact in coupling connector (i2)
5	**CHECK POOR CONTACT.** Check poor contact in combination meter connector. <Ref. to IDI-15, Combination Meter Assembly.>	Is there poor contact in combination meter connector?	Repair poor contact in combination meter connector.	Go to step **6**.

No.	Step	Check	Yes	No
6	**CHECK HARNESS BETWEEN COMBINATION METER AND IGNITION SWITCH CONNECTOR.** 1) Turn ignition switch to ON. 2) Measure voltage between combination meter connector and chassis ground. ***Connector & terminal*** ***(i10) No. 2 (+) — Chassis ground (−):***	Is voltage more than 10 V?	Go to step **7**.	Check the following and repair if necessary. NOTE: ● Broken down ignition relay. ● Blown out fuse (No. 5). ● If replaced fuse (No. 5) blows easily, check the harness for short circuit of harness between fuse (No. 5) and ignition relay connector. ● Open or short circuit in harness between fuse (No. 5) and battery terminal ● Open circuit in harness between fuse (No. 5) and ignition relay connector ● Poor contact in coupling connector (i1) ● Poor contact in ignition relay connector ● Poor contact in ignition switch connector
7	**CHECK POOR CONTACT.** Check poor contact in combination meter connector. <Ref. to IDI-15, Combination Meter Assembly.>	Is there poor contact in combination meter connector?	Repair poor contact in combination meter connector.	Replace bulb or combination meter.

MEMO:

D: CHECK ENGINE MALFUNCTION INDICATOR LAMP (MIL) DOES NOT GO OFF. S068653E91

- **DIAGNOSIS:**
  - The CHECK ENGINE malfunction indicator lamp (MIL) circuit is shorted.
- **TROUBLE SYMPTOM:**
  - Although MIL comes on when engine runs, trouble code is not shown on Subaru select monitor or OBD-II general scan tool display.
- **WIRING DIAGRAM:**

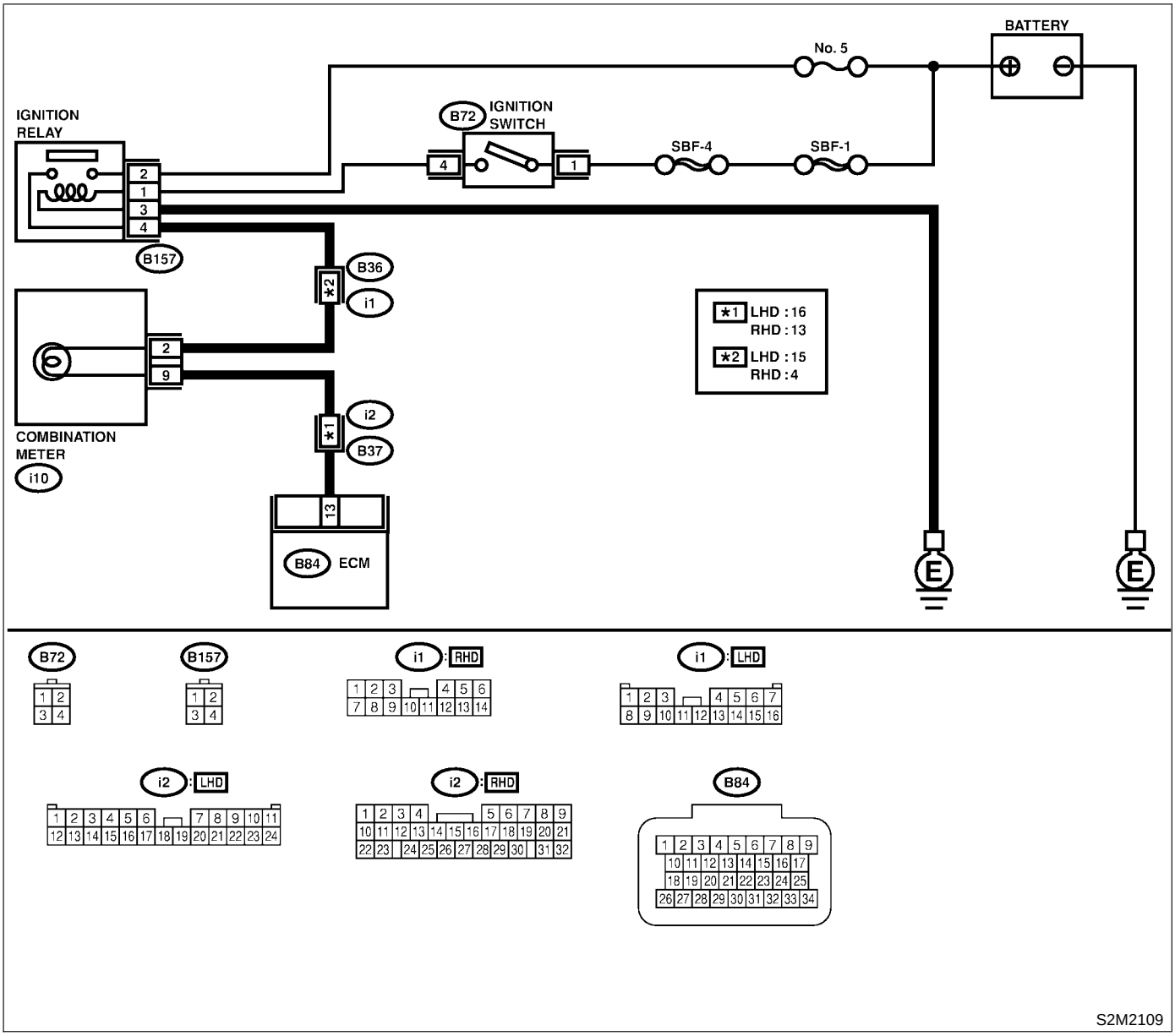

No.	Step	Check	Yes	No
1	**CHECK HARNESS BETWEEN COMBINATION METER AND ECM CONNECTOR.** 1) Turn ignition switch to OFF. 2) Disconnect connector from ECM. 3) Turn ignition switch to ON.	Does the MIL come on?	Repair short circuit in harness between combination meter and ECM connector.	Replace ECM. <Ref. to FU(SOHCw/oOBD)-38, Engine Control Module.>

MEMO:

E: CHECK ENGINE MALFUNCTION INDICATOR LAMP (MIL) DOES NOT BLINK AT A CYCLE OF 3 Hz. *S068653E92*

- **DIAGNOSIS:**
  - The CHECK ENGINE malfunction indicator lamp (MIL) circuit is open or shorted.
  - Test mode connector circuit is in open.
- **TROUBLE SYMPTOM:**
  - When inspection mode, MIL does not blink at a cycle of 3 Hz.

- **WIRING DIAGRAM:**

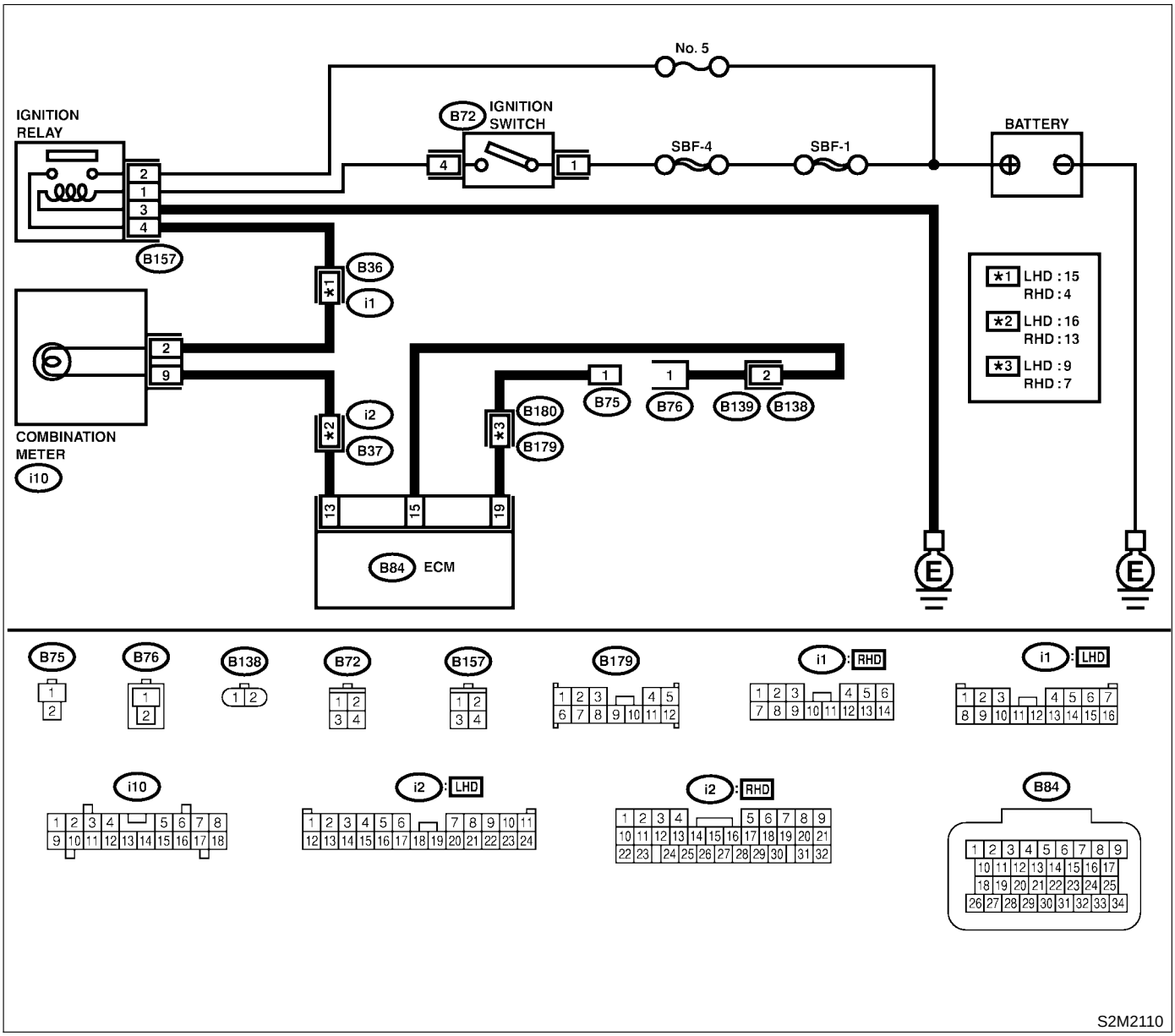

No.	Step	Check	Yes	No
1	**CHECK STATUS OF CHECK ENGINE MALFUNCTION INDICATOR LAMP (MIL).** 1) Turn ignition switch to OFF. 2) Disconnect test mode connector. 3) Turn ignition switch to ON.	Does the MIL come on?	Go to step **2**.	Repair the MIL circuit. <Ref. to EN(SOHCw/oOBD)-34, CHECK ENGINE MALFUNCTION INDICATOR LAMP (MIL) DOES NOT COME ON., Engine Malfunction Indicator Lamp (MIL).>

No.	Step	Check	Yes	No
2	**CHECK OUTPUT SIGNAL FROM ECM.** Measure voltage between test mode connector and chassis ground. ***Connector & terminal*** ***(B75) No. 1 (+) — Chassis ground (−):***	Is voltage less than 1 V?	Go to step **3**.	Go to step **5**.
3	**CHECK HARNESS BETWEEN ECM AND TEST MODE CONNECTOR.** 1) Turn ignition switch to OFF. 2) Disconnect connector from ECM. 3) Measure resistance of harness between ECM and test mode connector. ***Connector & terminal*** ***(B84) No. 19 — (B75) No. 1:***	Is resistance less than 1 Ω?	Go to step **4**.	Repair harness and connector. NOTE: In this case, repair the following: ● Open circuit in harness between ECM and test mode connector ● Poor contact in coupling connector (B180)
4	**CHECK POOR CONTACT.** Check poor contact in ECM connector.	Is there poor contact in ECM connector?	Repair poor contact in ECM connector.	Replace ECM. <Ref. to FU(SOHCw/oOBD)-38, Engine Control Module.>
5	**CHECK HARNESS BETWEEN ECM AND TEST MODE CONNECTOR.** 1) Turn ignition switch to OFF. 2) Disconnect connector from ECM. 3) Measure resistance of harness between ECM and test mode connector. ***Connector & terminal*** ***(B84) No. 15 — (B76) No. 1:***	Is resistance less than 1 Ω?	Go to step **6**.	Repair harness and connector. NOTE: In this case, repair the following: ● Open circuit in harness between ECM and test mode connector ● Poor contact in coupling connector (B138)
6	**CHECK POOR CONTACT.** Check poor contact in ECM connector.	Is there poor contact in ECM connector?	Repair poor contact in ECM connector.	Replace ECM. <Ref. to FU(SOHCw/oOBD)-38, Engine Control Module.>

MEMO:

F: CHECK ENGINE MALFUNCTION INDICATOR LAMP (MIL) REMAINS BLINKING AT A CYCLE OF 3 Hz. S068653E93

- **DIAGNOSIS:**
  - Test mode connector circuit is shorted.
- **TROUBLE SYMPTOM:**
  - Even though test mode connector is disconnected, MIL blinks at a cycle of 3 Hz when ignition switch is turned to ON.
- **WIRING DIAGRAM:**

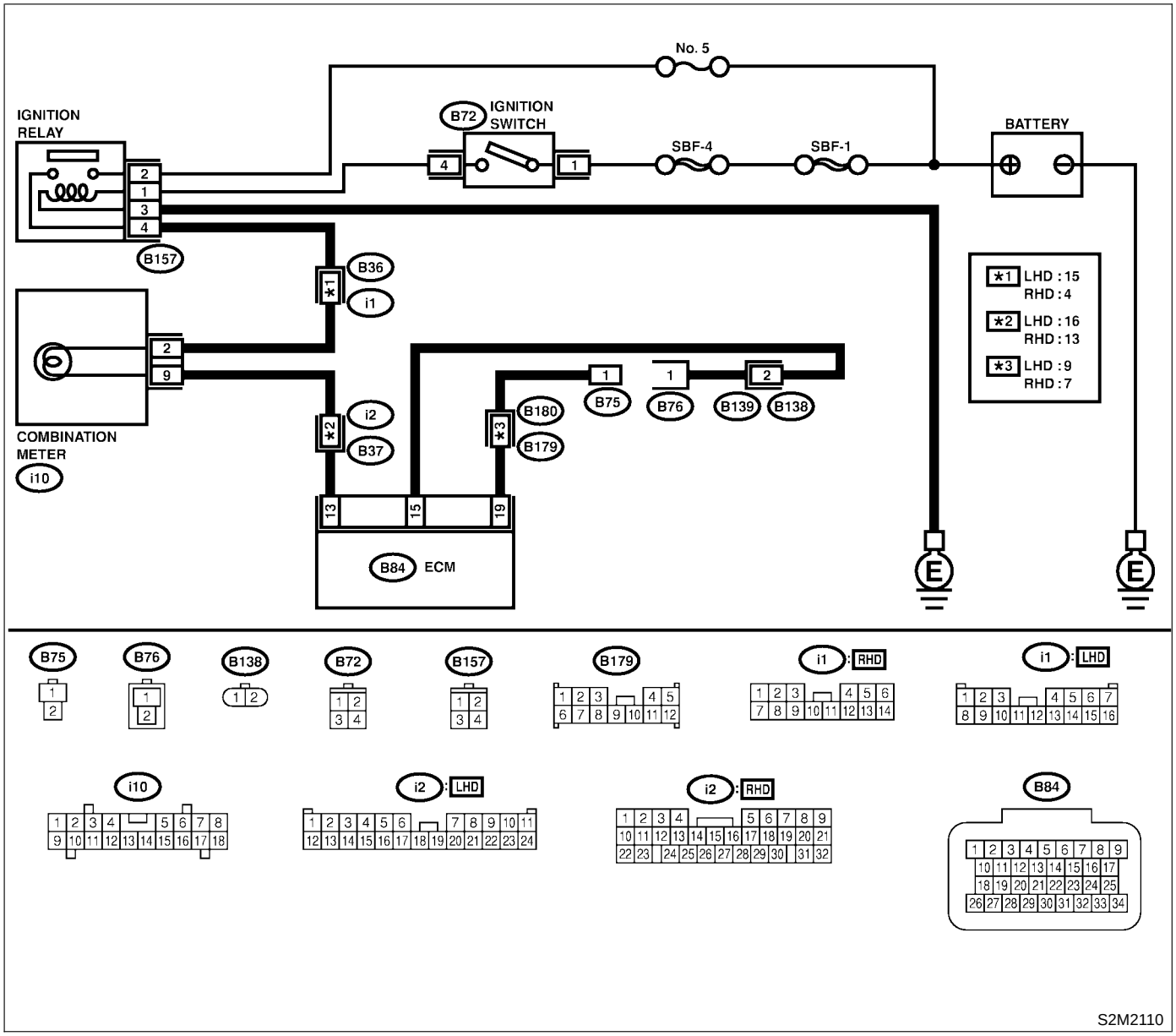

No.	Step	Check	Yes	No
1	**CHECK HARNESS BETWEEN ECM CONNECTOR AND ENGINE GROUNDING TERMINAL.** 1) Turn ignition switch to OFF. 2) Disconnect connector from ECM. 3) Measure resistance of harness between ECM connector and engine ground. ***Connector & terminal*** ***(B84) No. 19 — Engine ground:***	Is resistance less than 5 Ω?	Repair short circuit in harness between ECM and test mode connector.	Replace ECM. <Ref. to FU(SOHCw/oOBD)-38, Engine Control Module.>

MEMO:

12. Diagnostics for Engine Starting Failure S068533

A: PROCEDURE S068533E45

1. Inspection of starter motor circuit. <Ref. to EN(SOHCw/oOBD)-48 STARTER MOTOR CIRCUIT, Diagnostics for Engine Starting Failure.>
↓
2. Inspection of ECM power supply and ground line. <Ref. to EN(SOHCw/oOBD)-52 CONTROL MODULE POWER SUPPLY AND GROUND LINE, Diagnostics for Engine Starting Failure.>
↓
3. Inspection of ignition control system. <Ref. to EN(SOHCw/oOBD)-54 IGNITION CONTROL SYSTEM, Diagnostics for Engine Starting Failure.>
↓
4. Inspection of fuel pump circuit. <Ref. to EN(SOHCw/oOBD)-58 FUEL PUMP CIRCUIT, Diagnostics for Engine Starting Failure.>
↓
5. Inspection of fuel injector circuit. <Ref. to EN(SOHCw/oOBD)-62 FUEL INJECTOR CIRCUIT, Diagnostics for Engine Starting Failure.>

B: STARTER MOTOR CIRCUIT S068533E94

CAUTION:
After repair or replacement of faulty parts, conduct CLEAR MEMORY and INSPECTION MODES. <Ref. to EN(SOHCw/oOBD)-31 OPERATION, Clear Memory Mode.> and <Ref. to EN(SOHCw/oOBD)-29 OPERATION, Inspection Mode.>

- **WIRING DIAGRAM:**

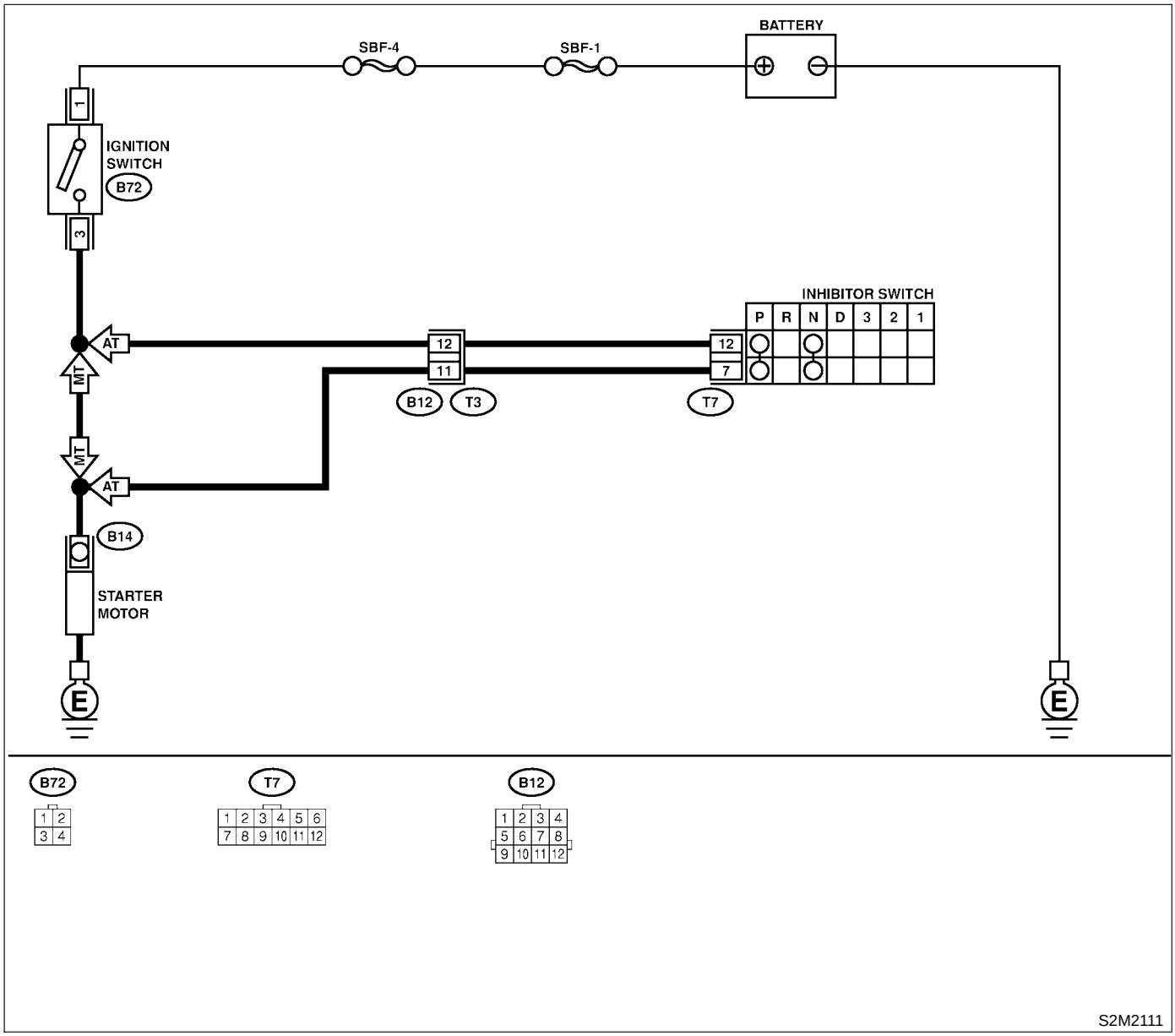

No.	Step	Check	Yes	No
1	**CHECK INPUT SIGNAL FOR STARTER MOTOR.** 1) Turn ignition switch to OFF. 2) Disconnect connector from starter motor. 3) Turn ignition switch to ST. 4) Measure power supply voltage between starter motor connector terminal and engine ground. ***Connector & terminal*** ***(B14) No. 1 (+) — Engine ground (−):*** NOTE: On AT vehicles, place the select lever in the “P” or “N” position.	Is the voltage more than 10 V?	Go to step **2**.	Go to step **3**.
2	**CHECK GROUND CIRCUIT OF STARTER MOTOR.** 1) Turn ignition switch to OFF. 2) Disconnect terminal from starter motor. 3) Measure resistance of ground cable between ground cable terminal and engine ground.	Is resistance less than 5 Ω?	Check starter motor. <Ref. to SC-8, INSPECTION, Starter.>	Repair open circuit of ground cable.
3	**CHECK HARNESS BETWEEN ECM AND STARTER MOTOR CIRCUIT.** 1) Turn ignition switch to OFF. 2) Measure resistance between starter motor and ECM. ***Connector & terminal*** ***(B14) No. 1 — Engine ground:***	Is resistance less than 1 Ω?	Repair ground short circuit.	Go to step **4**.
4	**CHECK HARNESS BETWEEN BATTERY AND IGNITION SWITCH CONNECTOR.** 1) Ignition switch to OFF. 2) Disconnect connector from ignition switch. 3) Measure power supply voltage between ignition switch connector and chassis ground. ***Connector & terminal*** ***(B72) No. 1 (+) — Chassis ground (−):***	Is the voltage more than 10 V?	Go to step **5**.	NOTE: Check the following and repair if necessary. ● Blown out fuse (SBF-1, SBF-4) ● If replaced fuse (SBF-1, SBF-4) blows easily, check the harness for short circuit of harness between fuse and ignition switch connector. ● Open circuit in harness between ignition switch and battery
5	**CHECK HARNESS BETWEEN BATTERY AND IGNITION SWITCH CONNECTOR.** 1) Connect connector to ignition switch. 2) Turn ignition switch to START. 3) Measure voltage between ignition switch and chassis ground. ***Connector & terminal*** ***(B72) No. 3 (+) — Chassis ground (−):***	Is the voltage more than 10 V?	Go to step **6**.	Replace ignition switch.
6	**CHECK TRANSMISSION TYPE.**	Is the vehicle AT?	Go to step **7**.	Repair open circuit between ignition switch and starter motor circuit.

No.	Step	Check	Yes	No
7	**CHECK INHIBITOR SWITCH CIRCUIT.** 1) Turn ignition switch to OFF. 2) Place the select lever in the “P” or “N” position. 3) Separate transmission harness connector. 4) Measure resistance between transmission harness connector receptacle’s terminals. ***Connector & terminal*** ***(T3) No. 11 — No. 12:***	Is the resistance less than 1 Ω?	Repair open circuit in harness between starter motor and ignition switch connector.	Go to step **8**.
8	**CHECK TRANSMISSION HARNESS.** 1) Disconnect connector from inhibitor switch. 2) Measure resistance of harness between transmission harness and inhibitor switch connector. ***Connector & terminal*** ***(T3) No. 11 — (T7) No. 7:*** ***(T3) No. 12 — (T7) No. 12:***	Is the resistance less than 1 Ω?	Go to step **9**.	Repair open circuit in harness between transmission harness and inhibitor switch connector.
9	**CHECK POOR CONTACT.** Check poor contact in inhibitor switch connector.	Is there poor contact in inhibitor switch connector?	Repair poor contact in inhibitor switch connector.	Replace inhibitor switch.

MEMO:

C: CONTROL MODULE POWER SUPPLY AND GROUND LINE S068533E37

CAUTION:
After repair or replacement of faulty parts, conduct CLEAR MEMORY and INSPECTION MODES. <Ref. to EN(SOHCw/oOBD)-31 OPERATION, Clear Memory Mode.> and <Ref. to EN(SOHCw/oOBD)-29 OPERATION, Inspection Mode.>

- **WIRING DIAGRAM:**

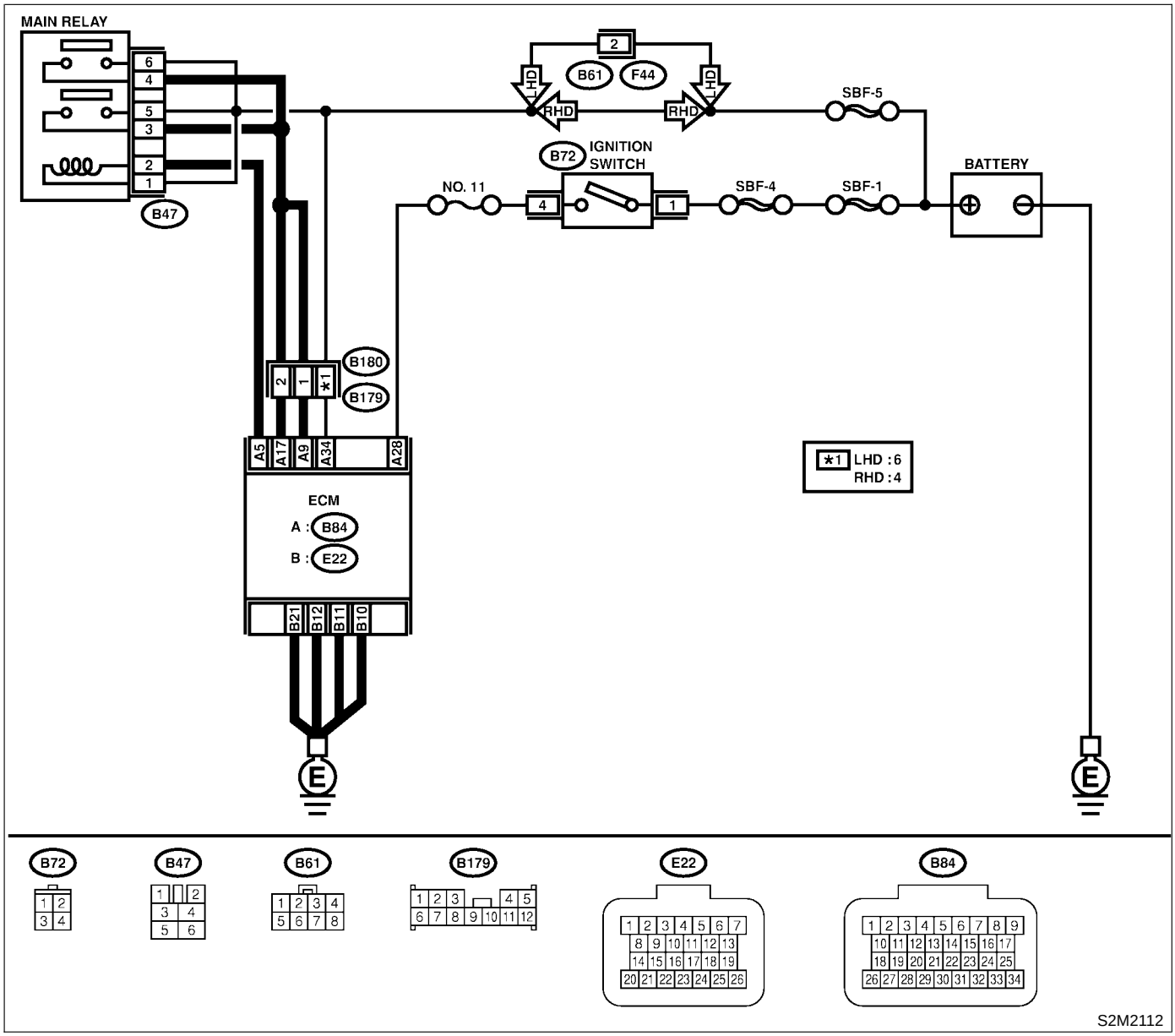

No.	Step	Check	Yes	No
1	**CHECK MAIN RELAY.** 1) Turn ignition switch to OFF. 2) Remove main relay. 3) Connect battery to main relay terminals No. 1 and No. 2. 4) Measure resistance between main relay terminals. ***Terminals*** ***No. 3 — No. 5:***	Is the resistance less than 10 Ω?	Go to step **2**.	Replace main relay.

No.	Step	Check	Yes	No
2	**CHECK MAIN RELAY.** Measure resistance between main relay terminals. ***Terminals*** ***No. 4 — No. 6:***	Is the resistance less than 10 Ω?	Go to step **3**.	Replace main relay.
3	**CHECK GROUND CIRCUIT OF ECM.** 1) Disconnect connectors from ECM. 2) Measure resistance of harness between ECM and engine ground. ***Connector & terminal*** ***(E22) No. 10 — Engine ground:*** ***(E22) No. 11 — Engine ground:*** ***(E22) No. 12 — Engine ground:*** ***(E22) No. 21 — Engine ground:***	Is the resistance less than 5 Ω?	Go to step **4**.	Repair open circuit in harness between ECM connector and engine grounding terminal.
4	**CHECK INPUT VOLTAGE OF ECM.** 1) Turn ignition switch to ON. 2) Measure voltage between ECM connector and engine ground. ***Connector & terminal*** ***(B84) No. 28 (+) — Engine ground (–):***	Is the voltage more than 10 V?	Go to step **5**.	Repair open or ground short circuit of power supply circuit.
5	**CHECK INPUT VOLTAGE OF MAIN RELAY.** Measure voltage between main relay connector and chassis ground. ***Connector & terminal*** ***(B47) No. 1 (+) — Chassis ground (–):*** ***(B47) No. 5 (+) — Chassis ground (–):*** ***(B47) No. 6 (+) — Chassis ground (–):***	Is the voltage more than 10 V?	Go to step **6**.	Repair open or ground short circuit of power supply circuit.
6	**CHECK INPUT VOLTAGE OF ECM.** Measure voltage between ECM connector and engine ground. ***Connector & terminal*** ***(B84) No. 34 (+) — Engine ground (–):***	Is the voltage more than 10 V?	Go to step **7**.	Repair open or ground short circuit of power supply circuit.
7	**CHECK INPUT VOLTAGE OF ECM.** 1) Turn ignition switch to OFF. 2) Connect main relay connector. 3) Measure voltage between ECM connector and engine ground. ***Connector & terminal*** ***(B84) No. 5 (+) — Engine ground (–):***	Is the voltage more than 10 V?	Go to step **8**.	Repair open or ground short circuit between ECM connector and main relay connector.
8	**CHECK INPUT VOLTAGE OF ECM.** 1) Connect ST. <Ref. to EN(SOHCw/oOBD)-23, HOW TO CHECK I/O SIGNAL FOR ECM, Engine Control Module (ECM) I/O Signal.> ST 498307600 CHECK BOARD KIT 2) Measure voltage between ECM connector and engine ground. ***Connector & terminal*** ***(B) No. 27 (+) — Engine ground (–):*** ***(C) No. 36 (+) — Engine ground (–):***	Is the voltage more than 10 V?	Check ignition control system. <Ref. to EN(SOHCw/oOBD)-54, IGNITION CONTROL SYSTEM, Diagnostics for Engine Starting Failure.>	Repair open or ground short circuit between ECM connector and main relay connector.

D: IGNITION CONTROL SYSTEM S068533E95

CAUTION:
After repair or replacement of faulty parts, conduct CLEAR MEMORY and INSPECTION MODES. <Ref. to EN(SOHCw/oOBD)-31 OPERATION, Clear Memory Mode.> and <Ref. to EN(SOHCw/oOBD)-29 OPERATION, Inspection Mode.>

- **WIRING DIAGRAM:**

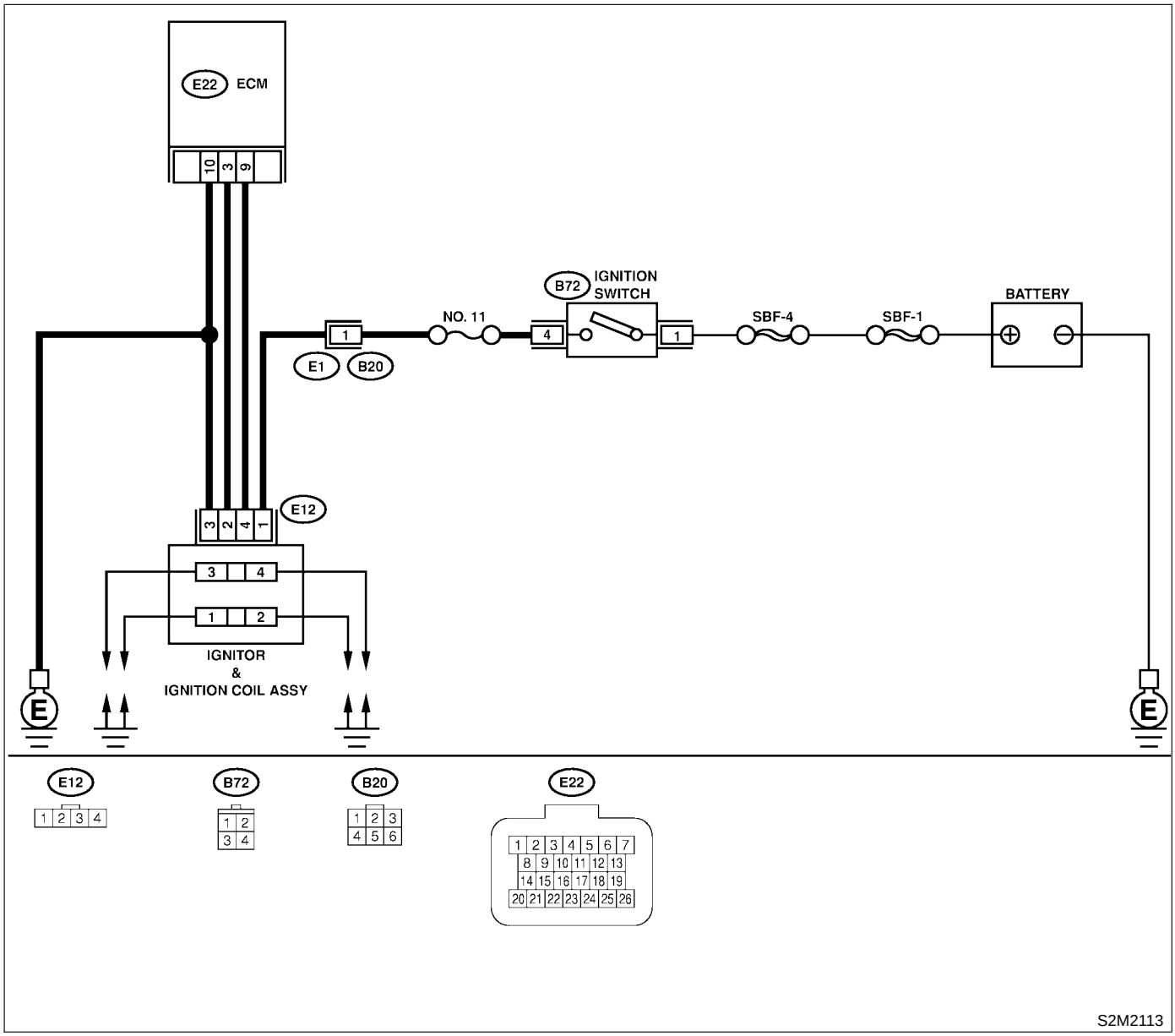

No.	Step	Check	Yes	No
1	**CHECK IGNITION SYSTEM FOR SPARKS.** 1) Remove plug cord cap from each spark plug. 2) Install new spark plug on plug cord cap. **CAUTION:** **Do not remove spark plug from engine.** 3) Contact spark plug's thread portion on engine. 4) While opening throttle valve fully, crank engine to check that spark occurs at each cylinder.	Does spark occur at each cylinder?	Check fuel pump system. <Ref. to EN(SOHCw/oOBD)-58, FUEL PUMP CIRCUIT, Diagnostics for Engine Starting Failure.>	Go to step **2**.
2	**CHECK POWER SUPPLY CIRCUIT FOR IGNITION COIL & IGNITOR ASSEMBLY.** 1) Turn ignition switch to OFF. 2) Disconnect connector from ignition coil & ignitor assembly. 3) Turn ignition switch to ON. 4) Measure power supply voltage between ignition coil & ignitor assembly connector and engine ground. ***Connector & terminal*** ***(E12) No. 1 (+) — Engine ground (−):***	Is the voltage more than 10 V?	Go to step **3**.	Repair harness and connector. NOTE: In this case, repair the following: ● Open circuit in harness between ignition coil & ignitor assembly, and ignition switch connector ● Poor contact in coupling connector (B20)
3	**CHECK HARNESS OF IGNITION COIL & IGNITOR ASSEMBLY GROUND CIRCUIT.** 1) Turn ignition switch to OFF. 2) Measure resistance between ignition coil & ignitor assembly connector and engine ground. ***Connector & terminal*** ***(E12) No. 3 — Engine ground:***	Is the resistance between less than 5 Ω?	Go to step **4**.	Repair harness and connector. NOTE: In this case, repair the following: ● Open circuit in harness between ignition coil & ignitor assembly connector and engine grounding terminal
4	**CHECK IGNITION COIL & IGNITOR ASSEMBLY.** 1) Remove spark plug cords. 2) Measure resistance between spark plug cord contact portions to check secondary coil. ***Terminals*** ***No. 1 — No. 2:*** ***No. 3 — No. 4:***	Is the resistance between 10 and 15 Ω?	Go to step **5**.	Replace ignition coil & ignitor assembly. <Ref. to IG(SOHCw/oOBD)-9, Ignition Coil and Ignitor Assembly.>
5	**CHECK INPUT SIGNAL FOR IGNITION COIL & IGNITOR ASSEMBLY.** Check if voltage varies synchronously with engine speed when cranking, while monitoring voltage between ignition coil & ignitor assembly connector and engine ground. ***Connector & terminal*** ***(E12) No. 2 (+) — Engine ground (–):*** ***(E12) No. 4 (+) — Engine ground (–):***	Is the voltage more than 10 V?	Go to step **6**.	Replace ignition coil & ignitor assembly.

No.	Step	Check	Yes	No
6	**CHECK HARNESS BETWEEN ECM AND IGNITION COIL & IGNITOR ASSEMBLY CONNECTOR.** 1) Disconnect connector from ECM. 2) Measure resistance of harness between ECM and ignition coil & ignitor assembly connector. ***Connector & terminal*** ***(E22) No. 9 — (E12) No. 4:*** ***(E22) No. 3 — (E12) No. 2:*** ***(E22) No. 10 — (E12) No. 3:***	Is the resistance less than 1 Ω?	Go to step **7**.	Repair open circuit in harness between ECM and ignition coil & ignitor assembly connector.
7	**CHECK HARNESS BETWEEN ECM AND IGNITION COIL & IGNITOR ASSEMBLY CONNECTOR.** Measure resistance of harness between ECM and engine ground. ***Connector & terminal:*** ***(E22) No. 3 — Engine ground:*** ***(E22) No. 9 — Engine ground:***	Is the resistance more than 1 MΩ?	Go to step **8**.	Repair ground short circuit in harness between ECM and ignition coil & ignitor assembly connector.
8	**CHECK POOR CONTACT.** Check poor contact in ECM connector.	Is there poor contact in ECM connector?	Repair poor contact in ECM connector.	Check fuel pump circuit. <Ref. to EN(SOHCw/oOBD)-58, FUEL PUMP CIRCUIT, Diagnostics for Engine Starting Failure.>

MEMO:

E: FUEL PUMP CIRCUIT S068533E96

CAUTION:
After repair or replacement of faulty parts, conduct CLEAR MEMORY and INSPECTION MODES. <Ref. to EN(SOHCw/oOBD)-31 OPERATION, Clear Memory Mode.> and <Ref. to EN(SOHCw/oOBD)-29 OPERATION, Inspection Mode.>

- **WIRING DIAGRAM:**

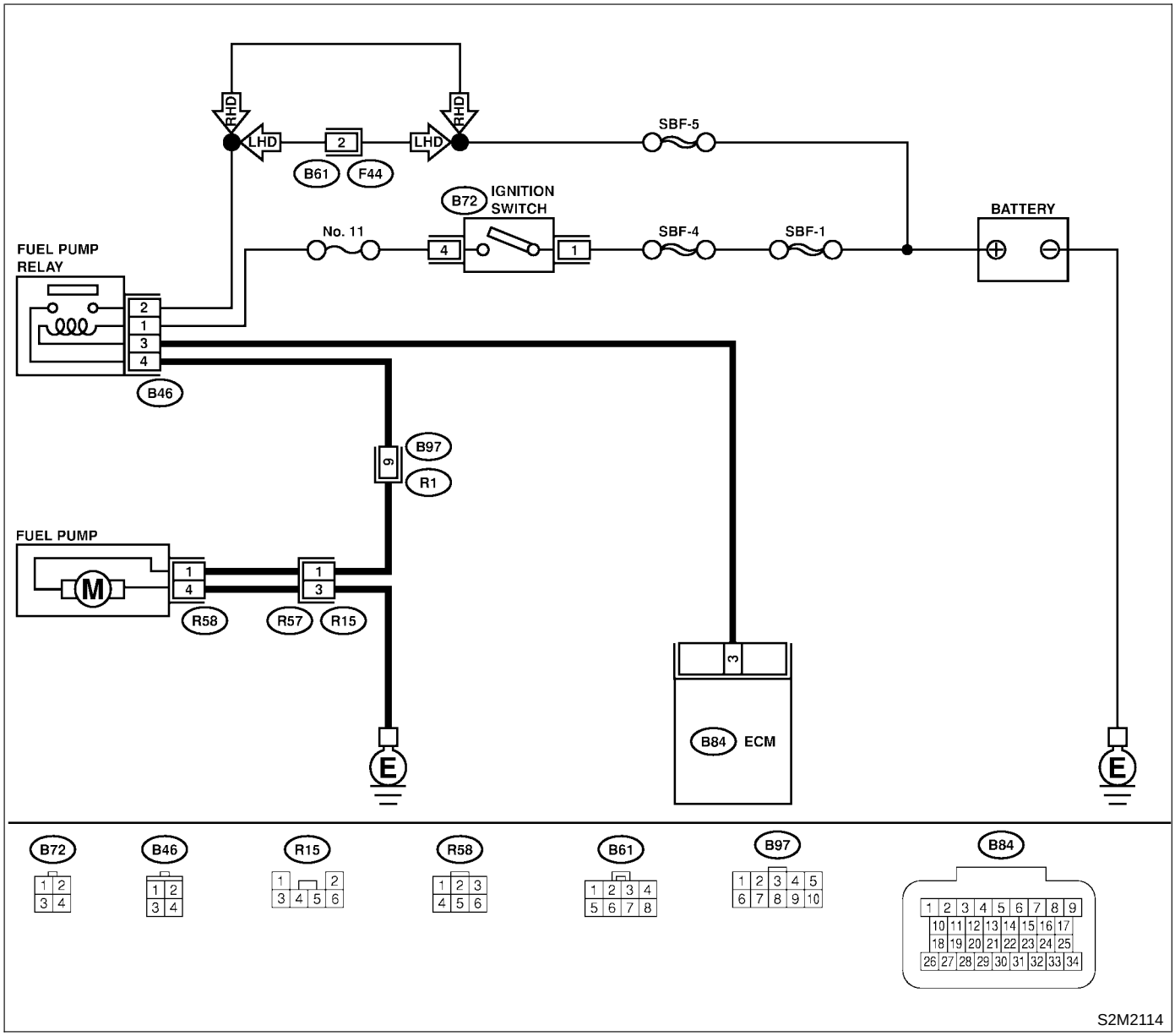

No.	Step	Check	Yes	No
1	**CHECK OPERATING SOUND OF FUEL PUMP.** 1) Connect test mode connector. 2) Turn ignition switch to ON. 3) Make sure that fuel pump is in operation. NOTE: For the procedure, refer to the “COMPULSORY VALVE OPERATION CHECK MODE”. <Ref. to EN(SOHCw/oOBD)-32, Compulsory Valve Operation Check Mode.>	Does fuel pump produce operating sound?	Check fuel injector circuit. <Ref. to EN(SOHCw/oOBD)-62, FUEL INJECTOR CIRCUIT, Diagnostics for Engine Starting Failure.>	Go to step **2**.
2	**CHECK GROUND CIRCUIT OF FUEL PUMP.** 1) Turn ignition switch to OFF. 2) Remove fuel pump access hole lid located on the luggage compartment floor. 3) Disconnect connector from fuel pump. 4) Measure resistance of harness connector between fuel pump and chassis ground. ***Connector & terminal*** ***(R58) No. 4 — Chassis ground:***	Is the resistance less than 5 Ω?	Go to step **3**.	Repair harness and connector. NOTE: In this case, repair the following: ● Open circuit in harness between fuel pump connector and chassis grounding terminal ● Poor contact in coupling connector (R15)
3	**CHECK POWER SUPPLY TO FUEL PUMP.** 1) Turn ignition switch to ON. 2) Measure voltage of power supply circuit between fuel pump connector and chassis ground. ***Connector & terminal*** ***(R58) No. 1 (+) — Chassis ground (−):***	Is the voltage more than 10 V?	Replace fuel pump. <Ref. to FU(SOHCw/oOBD)-50, Fuel Pump.>	Go to step **4**.
4	**CHECK HARNESS BETWEEN FUEL PUMP AND FUEL PUMP RELAY CONNECTOR.** 1) Turn ignition switch to OFF. 2) Measure resistance of harness between fuel pump and fuel pump relay connector. ***Connector & terminal*** ***(R58) No. 1 — (B46) No. 4:***	Is the resistance less than 1 Ω?	Go to step **5**.	Repair harness and connector. NOTE: In this case, repair the following: ● Open circuit in harness between fuel pump and fuel pump relay connector ● Poor contact in coupling connectors (R15) and (B97)
5	**CHECK HARNESS BETWEEN FUEL PUMP AND FUEL PUMP RELAY CONNECTOR.** Measure resistance of harness between fuel pump and fuel pump relay connector. ***Connector & terminal*** ***(R58) No. 1 — Chassis ground:***	Is the resistance more than 1 MΩ?	Go to step **6**.	Repair ground short circuit in harness between fuel pump and fuel pump relay connector.

No.	Step	Check	Yes	No
6	**CHECK FUEL PUMP RELAY.** 1) Disconnect connector from fuel pump relay. 2) Remove fuel pump relay from bracket. 3) Connect battery to fuel pump relay connector terminals No. 1 and No. 3. 4) Measure resistance between connector terminals of fuel pump relay. ***Terminals*** ***No. 2 — No. 4:***	Is the resistance less than 10 Ω?	Go to step **7**.	Replace fuel pump relay. <Ref. to FU(SOHCw/oOBD)-40, Fuel Pump Relay.>
7	**CHECK HARNESS BETWEEN ECM AND FUEL PUMP RELAY CONNECTOR.** 1) Disconnect connectors from ECM. 2) Measure resistance of harness between ECM and fuel pump relay connector. ***Connector & terminal*** ***(B84) No. 3 — (B46) No. 3:***	Is the resistance less than 1 Ω?	Go to step **8**.	Repair open circuit in harness between ECM and fuel pump relay connector.
8	**CHECK POOR CONTACT.** Check poor contact in ECM connector.	Is there poor contact in ECM connector?	Repair poor contact in ECM connector.	Check fuel injector circuit. <Ref. to EN(SOHCw/oOBD)-62, FUEL INJECTOR CIRCUIT, Diagnostics for Engine Starting Failure.>

MEMO:

F: FUEL INJECTOR CIRCUIT S068533E97

CAUTION:

- **Check or repair only faulty parts.**
- **After repair or replacement of faulty parts, conduct CLEAR MEMORY and INSPECTION MODES. <Ref. to EN(SOHCw/oOBD)-31 OPERATION, Clear Memory Mode.> and <Ref. to EN(SOHCw/oOBD)-29 OPERATION, Inspection Mode.>**

- **WIRING DIAGRAM:**

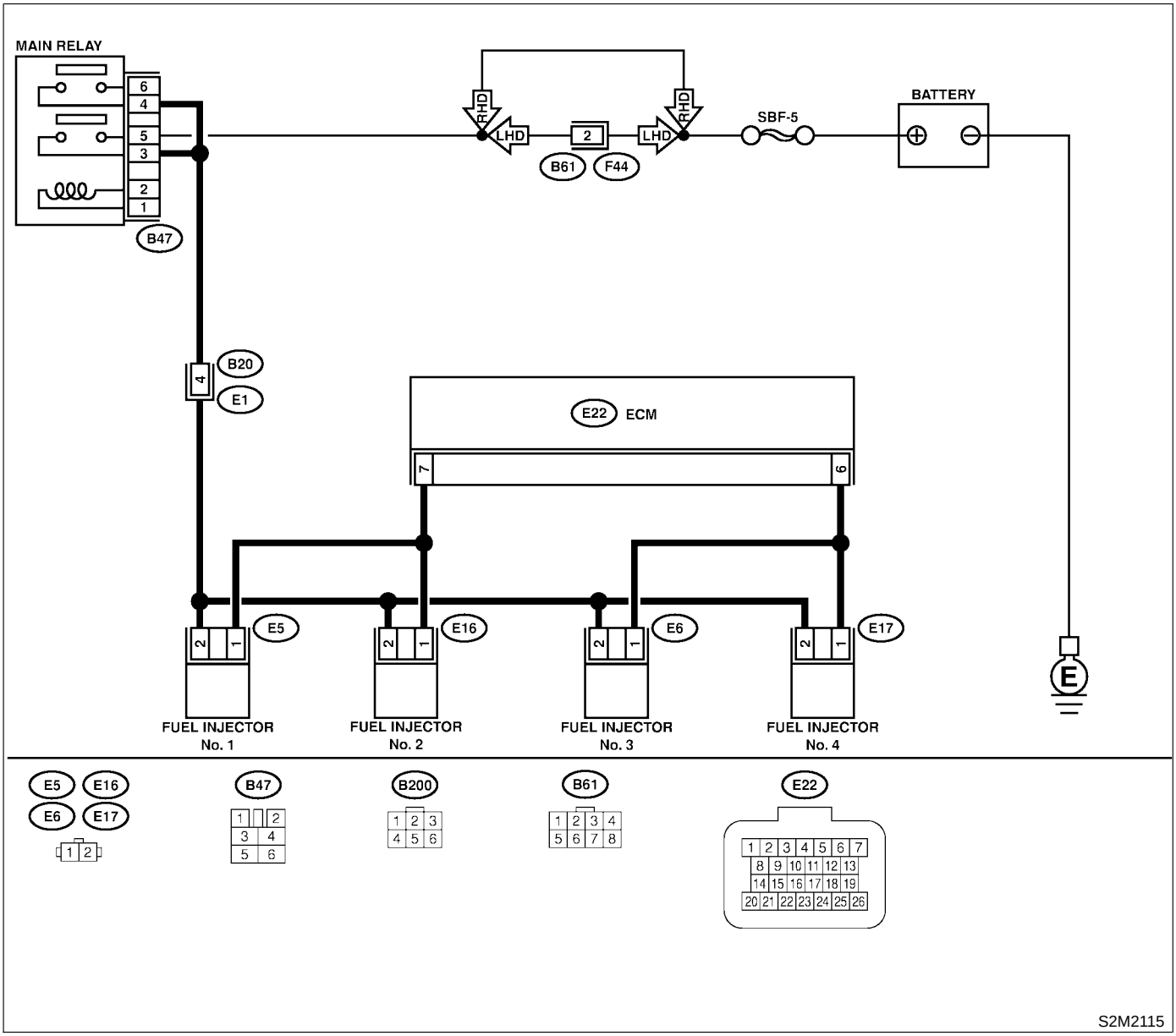

No.	Step	Check	Yes	No
1	**CHECK OPERATION OF EACH FUEL INJECTOR.** While cranking the engine, check that each fuel injector emits “operating” sound. Use a sound scope or attach a screwdriver to injector for this check.	Is the fuel injector emits “operating” sound?	Check fuel pressure. <Ref. to ME(SOHC)-28, Fuel Pressure.>	Go to step **2**.

No.	Step	Check	Yes	No
2	**CHECK POWER SUPPLY TO EACH FUEL INJECTOR.** 1) Turn ignition switch to OFF. 2) Disconnect connector from fuel injector. 3) Turn ignition switch to ON. 4) Measure power supply voltage between the fuel injector terminal and engine ground. ***Connector & terminal*** ***#1 (E5) No. 2 (+) — Engine ground (–):*** ***#2 (E16) No. 2 (+) — Engine ground (–):*** ***#3 (E6) No. 2 (+) — Engine ground (–):*** ***#4 (E17) No. 2 (+) — Engine ground (–):***	Is the voltage more than 10 V?	Go to step **3**.	Repair harness and connector. NOTE: In this case, repair the following: ● Open circuit in harness between main relay and fuel injector connector ● Poor contact in main relay connector ● Poor contact in coupling connector (B20) ● Poor contact in fuel injector connector
3	**CHECK EACH FUEL INJECTOR.** 1) Turn ignition switch to OFF. 2) Measure resistance between each fuel injector terminals. ***Terminals*** ***No. 1 — No. 2:***	Is the resistance between 11 and 12 Ω?	Go to step **4**.	Replace faulty fuel injector. <Ref. to FU(SOHCw/oOBD)-32, Fuel Injector.>
4	**CHECK HARNESS BETWEEN ECM AND FUEL INJECTOR CONNECTOR.** 1) Disconnect connector from ECM. 2) Measure resistance of harness between ECM and fuel injector connector. ***Connector & terminal*** ***(E22) No. 7 — #1 (E5) No. 1:*** ***(E22) No. 7 — #2 (E16) No. 1:*** ***(E22) No. 6 — #3 (E6) No. 1:*** ***(E22) No. 6 — #4 (E17) No. 1:***	Is the resistance less than 1 Ω?	Go to step **5**.	Repair open circuit in harness between ECM and fuel injector connector.
5	**CHECK HARNESS BETWEEN ECM AND FUEL INJECTOR CONNECTOR.** Measure resistance of harness between ECM and fuel injector connector. ***Connector & terminal*** ***(E22) No. 6 — Engine ground:*** ***(E22) No. 7 — Engine ground:***	Is the resistance more than 1 MΩ?	Go to step **6**.	Repair ground short in harness between ECM and fuel injector connector.
6	**CHECK POOR CONTACT.** Check poor contact in ECM connector.	Is there poor contact in ECM connector?	Repair poor contact in ECM connector.	Check crankshaft position sensor circuit. <Ref. to EN(SOHCw/oOBD)-64, CRANKSHAFT POSITION SENSOR CIRCUIT, Diagnostics for Engine Starting Failure.>

G: CRANKSHAFT POSITION SENSOR CIRCUIT S068533E98

CAUTION:
After repair or replacement of faulty parts, conduct CLEAR MEMORY and INSPECTION MODES. <Ref. to EN(SOHCw/oOBD)-31, Clear Memory Mode.>, <Ref. to EN(SOHCw/oOBD)-29, Inspection Mode.>

NOTE:
Check crankshaft position sensor circuit. <Ref. to EN(SOHCw/oOBD)-68, DTC 11 CRANKSHAFT POSITION SENSOR, Diagnostic Procedure with Diagnostic Trouble Code (DTC).>

13. List of Diagnostic Trouble Code (DTC) S068525

A: LIST S068525A12

DTC No.	Item	Contents of diagnosis	Index
11	Crankshaft position sensor	● No signal entered from crankshaft position sensor when ignition switch is ON. ● The harness connector between ECM and crankshaft position sensor is in short or open.	<Ref. to EN(SOHCw/oOBD)-68, DTC 11 CRANKSHAFT POSITION SENSOR, Diagnostic Procedure with Diagnostic Trouble Code (DTC).>
21	Engine coolant temperature sensor	● The engine coolant temperature sensor signal is abnormal. ● The harness connector between ECM and engine coolant temperature sensor is in short or open.	<Ref. to EN(SOHCw/oOBD)-70, DTC 21 ENGINE COOLANT TEMPERATURE SENSOR, Diagnostic Procedure with Diagnostic Trouble Code (DTC).>
22	Knock sensor	● The knock sensor signal is abnormal. ● The harness connector between ECM and knock sensor is in short or open.	<Ref. to EN(SOHCw/oOBD)-74, DTC 22 KNOCK SENSOR, Diagnostic Procedure with Diagnostic Trouble Code (DTC).>
45	Pressure sensor	● The pressure sensor signal is abnormal. ● The harness connector between ECM and pressure sensor is in short or open.	<Ref. to EN(SOHCw/oOBD)-78, DTC 45 PRESSURE SENSOR, Diagnostic Procedure with Diagnostic Trouble Code (DTC).>
24	Idle air control solenoid valve	● The idle air control solenoid valve is not in function. ● The harness connector between ECM and idle air control solenoid valve is in short or open.	<Ref. to EN(SOHCw/oOBD)-80, DTC 24 IDLE AIR CONTROL SOLENOID VALVE, Diagnostic Procedure with Diagnostic Trouble Code (DTC).>
26	Intake air temperature sensor	● The intake air temperature sensor signal is abnormal. ● The harness connector between ECM and intake air temperature sensor is in short or open.	<Ref. to EN(SOHCw/oOBD)-84, DTC 26 INTAKE AIR TEMPERATURE SENSOR, Diagnostic Procedure with Diagnostic Trouble Code (DTC).>
31	Throttle position sensor	● The throttle position sensor signal is abnormal. ● The throttle position sensor is installed abnormally. ● The harness connector between ECM and throttle position sensor is in short or open.	<Ref. to EN(SOHCw/oOBD)-86, DTC 31 THROTTLE POSITION SENSOR, Diagnostic Procedure with Diagnostic Trouble Code (DTC).>
32	Oxygen sensor (With catalyst vehicles)	● The oxygen sensor is not in function. ● The harness connector between ECM and oxygen sensor is in short or open.	<Ref. to EN(SOHCw/oOBD)-90, DTC 32 OXYGEN SENSOR, Diagnostic Procedure with Diagnostic Trouble Code (DTC).>

LIST OF DIAGNOSTIC TROUBLE CODE (DTC)

DTC No.	Item	Contents of diagnosis	Index
33	Vehicle speed signal	● The vehicle speed signal is abnormal. ● The harness connector between ECM and combination meter is in short or open.	<Ref. to EN(SOHCw/oOBD)-94, DTC 33 VEHICLE SPEED SIGNAL, Diagnostic Procedure with Diagnostic Trouble Code (DTC).>
35	Purge control solenoid valve	● The purge control solenoid valve is not in function. ● The harness connector between ECM and purge control solenoid valve is in short or open.	<Ref. to EN(SOHCw/oOBD)-96, DTC 35 PURGE CONTROL SOLENOID VALVE, Diagnostic Procedure with Diagnostic Trouble Code (DTC).>
38	Torque control signal	● Abnormal signal entered from TCM. ● The harness connector between ECM and TCM is in short.	<Ref. to EN(SOHCw/oOBD)-100, DTC 38 TORQUE CONTROL SIGNAL, Diagnostic Procedure with Diagnostic Trouble Code (DTC).>
46	CO resistor (General spec. vehicles)	● The CO resistor signal is abnormal. ● The harness connector between ECM and CO resistor is in short or open. ● The CO value is not adjusted to specifications.	<Ref. to EN(SOHCw/oOBD)-102, DTC 46 CO RESISTOR (GENERAL SPEC. VEHICLES), Diagnostic Procedure with Diagnostic Trouble Code (DTC).>
51	Neutral position switch	● The neutral position switch signal is abnormal. ● The harness connector between ECM and neutral position switch is in short or open.	<Ref. to EN(SOHCw/oOBD)-104, DTC 51 NEUTRAL POSITION SWITCH, Diagnostic Procedure with Diagnostic Trouble Code (DTC).>
53	Immobiliser system	Faulty immobiliser system.	<Ref. to IM-2, Basic Diagnostic Procedure.>
54	Air intake system	Because the ducts and hoses on air intake line are loosened or damaged, the pressure sensor signal is abnormal.	<Ref. to EN(SOHCw/oOBD)-108, DTC 54 — AIR INTAKE SYSTEM —, Diagnostic Procedure with Diagnostic Trouble Code (DTC).>
85	Charge system	Charge system is abnormal.	<Ref. to EN(SOHCw/oOBD)-111, DTC 85 CHARGE SYSTEM, Diagnostic Procedure with Diagnostic Trouble Code (DTC).>

MEMO:

14. Diagnostic Procedure with Diagnostic Trouble Code (DTC) S068521

A: DTC 11 CRANKSHAFT POSITION SENSOR S068521G55

- **DIAGNOSIS:**
  - No signal entered from crankshaft position sensor when ignition switch is ON.
  - The harness connector between ECM and crankshaft position sensor is in short or open.
- **TROUBLE SYMPTOM:**
  - Engine stalls.
  - Restarting impossible

CAUTION:
After repair or replacement of faulty parts, conduct CLEAR MEMORY and INSPECTION MODES. <Ref. to EN(SOHCw/oOBD)-31 OPERATION, Clear Memory Mode.> and <Ref. to EN(SOHCw/oOBD)-29 OPERATION, Inspection Mode.>

- **WIRING DIAGRAM:**

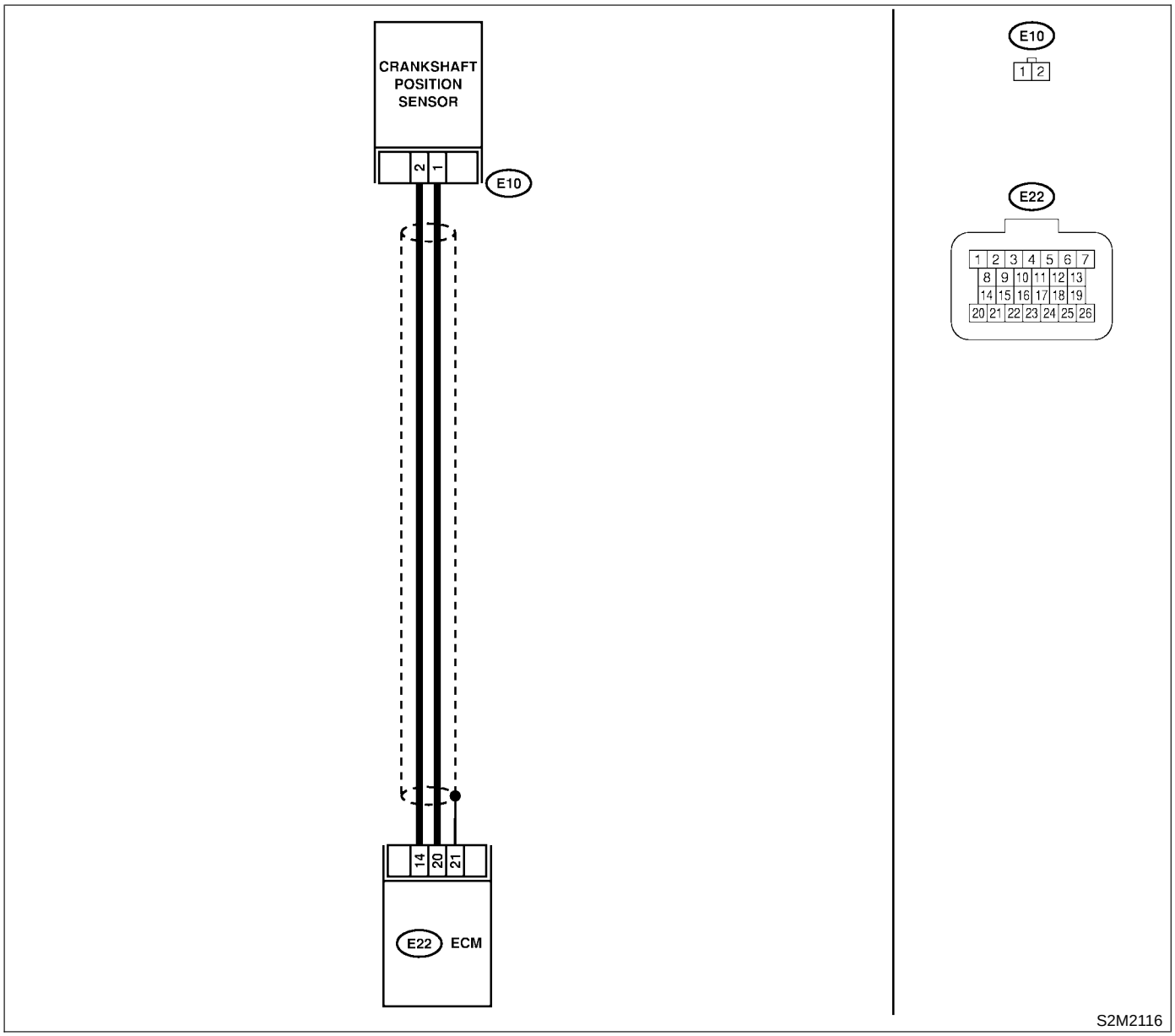

No.	Step	Check	Yes	No
1	**CHECK CONDITION OF CRANKSHAFT POSITION SENSOR INSTALLATION.**	Are the crankshaft position sensor installing bolts tightened securely?	Go to step **2**.	Tighten crankshaft position sensor installing bolts securely.
2	**CHECK CRANKSHAFT POSITION SENSOR.** 1) Remove crankshaft position sensor. 2) Measure resistance between connector terminals of crankshaft position sensor. ***Terminals*** ***No. 1 — No. 2:***	Is the resistance between 1 and 4 kΩ?	Go to step **3**.	Replace crankshaft position sensor.
3	**CHECK HARNESS BETWEEN ECM AND CRANKSHAFT POSITION SENSOR CONNECTOR.** 1) Connect connector to crankshaft position sensor. 2) Disconnect connector from ECM. 3) Measure resistance of harness between crankshaft position sensor connector and ECM. ***Connector & terminal*** ***(E22) No. 14 — (E22) No. 20:***	Is the resistance between 1 and 5 kΩ?	Go to step **4**.	Repair harness and connector. NOTE: In this case, repair the following: ● Open circuit in harness between crankshaft position sensor and ECM connector
4	**CHECK HARNESS BETWEEN ECM AND CRANKSHAFT POSITION SENSOR CONNECTOR.** Measure resistance of harness between ECM connector and chassis ground. ***Connector & terminal*** ***(E22) No. 20 — Engine ground:***	Is the resistance less than 10 Ω?	Repair ground short circuit in harness between crankshaft position sensor and ECM connector.	Go to step **5**.
5	**CHECK INPUT SIGNAL FOR ECM.** 1) Turn ignition switch to OFF. 2) Disconnect connector from ECM, then connect ST. <Ref. to EN(SOHCw/oOBD)-23, HOW TO CHECK I/O SIGNAL FOR ECM, Engine Control Module (ECM) I/O Signal.> ST 498307600 CHECK BOARD KIT 3) Set the positive (+) probe and ground lead of oscilloscope at ECM connector terminals. 4) Measure voltage indicated on oscilloscope while cranking the engine. ***Connector & terminal*** ***(B) No. 26 (+) — (B) No. 19 (−):***	Is the voltage more than 400 mV?	Go to step **6**.	Replace crankshaft position sensor.
6	**CHECK POOR CONTACT.** Check poor contact in ECM connector.	Is there poor contact in ECM connector?	Repair poor contact in ECM connector.	Go to step **7**.
7	**CHECK ECM.** 1) Connect all connectors. 2) Erase the memory. <Ref. to EN(SOHCw/oOBD)-31, Clear Memory Mode.> 3) Perform inspection mode. <Ref. to EN(SOHCw/oOBD)-29, Inspection Mode.> 4) Read out the trouble code. <Ref. to EN(SOHCw/oOBD)-27, Read Diagnostic Trouble Code.>	Is the same trouble code as in the current diagnosis still being output?	Replace generator.	Go to step **8**.
8	**CHECK ANY OTHER TROUBLE CODES APPEARANCE.**	Are other trouble codes being output?	Proceed with the diagnosis corresponding to the trouble code.	A temporary poor contact.

B: DTC 21 ENGINE COOLANT TEMPERATURE SENSOR S068521G58

- **DIAGNOSIS:**
  - The engine coolant temperature sensor signal is abnormal.
  - The harness connector between ECM and engine coolant temperature sensor is in short or open.
- **TROUBLE SYMPTOM:**
  - Hard to start
  - Erroneous idling
  - Poor driving performance

CAUTION:
After repair or replacement of faulty parts, conduct CLEAR MEMORY and INSPECTION MODES. <Ref. to EN(SOHCw/oOBD)-31 OPERATION, Clear Memory Mode.> and <Ref. to EN(SOHCw/oOBD)-29 OPERATION, Inspection Mode.>

- **WIRING DIAGRAM:**

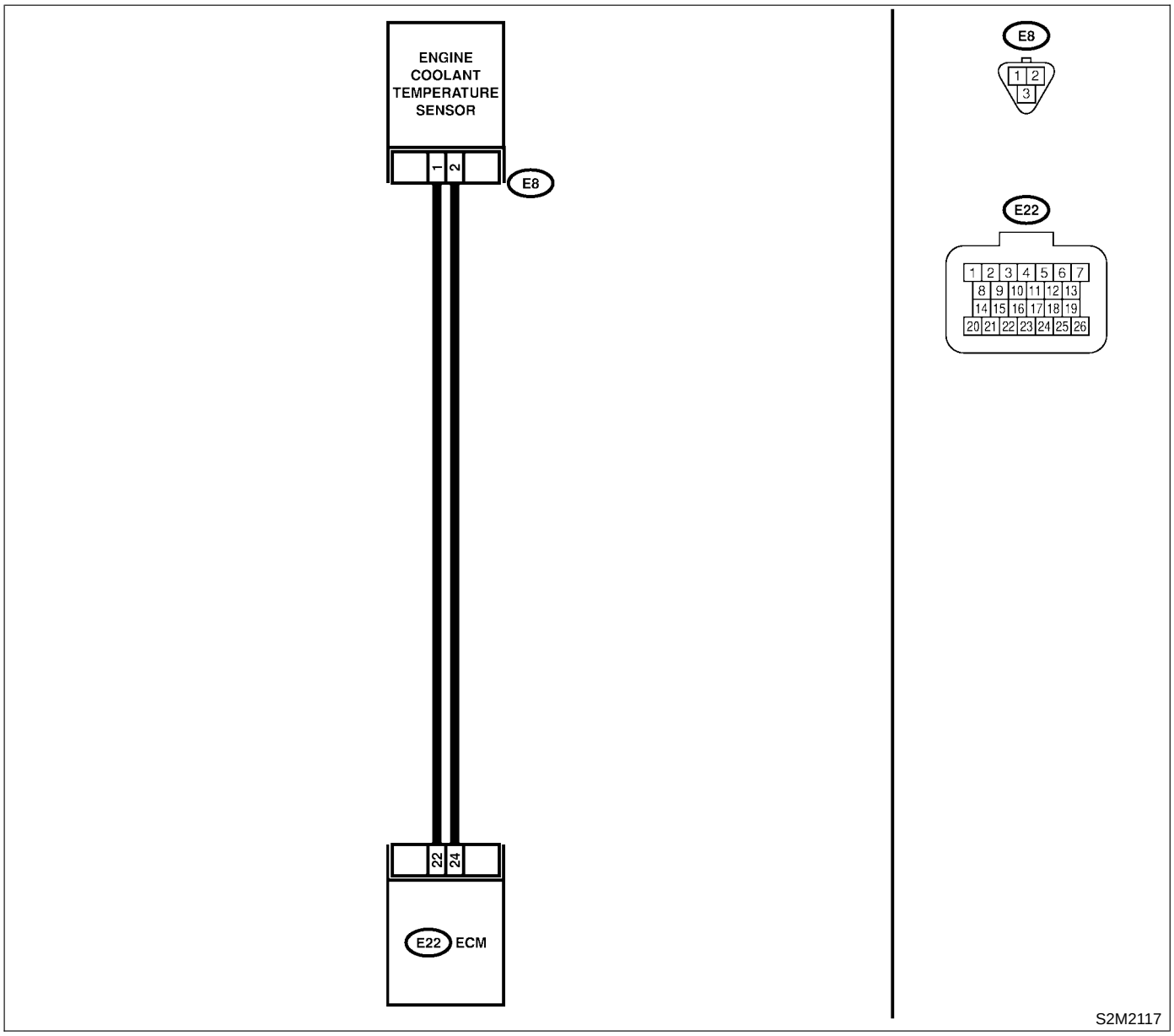

No.	Step	Check	Yes	No
1	**CHECK HARNESS BETWEEN ENGINE COOLANT TEMPERATURE SENSOR AND ECM CONNECTOR.** 1) Turn ignition switch to OFF. 2) Remove air intake duct and air cleaner assembly. 3) Disconnect connector from engine coolant temperature sensor. 4) Measure voltage between engine coolant temperature sensor connector and engine ground. ***Connector & terminal*** ***(E8) No. 2 (+) — Engine ground (−):***	Is the voltage more than 10 V?	Repair battery short circuit in harness between ECM and engine coolant temperature sensor connector.	Go to step **2**.
2	**CHECK HARNESS BETWEEN ENGINE COOLANT TEMPERATURE SENSOR AND ECM CONNECTOR.** 1) Turn ignition switch to ON. 2) Measure voltage between engine coolant temperature sensor connector and engine ground. ***Connector & terminal*** ***(E8) No. 2 (+) — Engine ground (−):***	Is the voltage more than 10 V?	Repair battery short circuit in harness between ECM and engine coolant temperature sensor connector.	Go to step **3**.
3	**CHECK HARNESS BETWEEN ENGINE COOLANT TEMPERATURE SENSOR AND ECM CONNECTOR.** Measure voltage between engine coolant temperature sensor connector and engine ground. ***Connector & terminal*** ***(E8) No. 2 (+) — Engine ground (−):***	Is the voltage more than 4 V?	Go to step **4**.	Repair harness and connector. NOTE: In this case, repair the following: ● Open circuit in harness between ECM and engine coolant temperature sensor connector ● Poor contact in engine coolant temperature sensor connector ● Poor contact in ECM connector
4	**CHECK HARNESS BETWEEN ENGINE COOLANT TEMPERATURE SENSOR AND ECM CONNECTOR.** 1) Turn ignition switch to OFF. 2) Measure resistance of harness between engine coolant temperature sensor connector and engine ground. ***Connector & terminal*** ***(E8) No. 1 — Engine ground:***	Is the resistance less than 5 Ω?	Go to step **5**.	Repair harness and connector. NOTE: In this case, repair the following: ● Open circuit in harness between ECM and engine coolant temperature sensor connector ● Poor contact in engine coolant temperature sensor connector ● Poor contact in ECM connector

No.	Step	Check	Yes	No
5	**CHECK ENGINE COOLANT TEMPERATURE SENSOR.** Measure resistance between engine coolant temperature sensor terminals. ***Terminals*** ***No. 1 — No. 2:***	Is the resistance between 2 and 3 kΩ at 20°C (68°F)?	Go to step **6**.	Replace engine coolant temperature sensor. <Ref. to FU(SOHCw/oOBD)-23, Engine Coolant Temperature Sensor.>
6	**CHECK ENGINE COOLANT TEMPERATURE SENSOR.** Measure resistance between engine coolant temperature sensor terminals. ***Terminals*** ***No. 1 — No. 2:***	Is the resistance between 0.35 and 0.4 kΩ at 80°C (176°F)?	Go to step **7**.	Replace engine coolant temperature sensor. <Ref. to FU(SOHCw/oOBD)-23, Engine Coolant Temperature Sensor.>
7	**CHECK ENGINE COOLANT TEMPERATURE SENSOR.** Measure resistance between engine coolant temperature sensor terminals. ***Terminals*** ***No. 1 — No. 2:***	Is the resistance between 0.2 and 0.3 kΩ at 90°C (194°F)?	Replace ECM. <Ref. to FU(SOHCw/oOBD)-38, Engine Control Module.>	Replace engine coolant temperature sensor. <Ref. to FU(SOHCw/oOBD)-23, Engine Coolant Temperature Sensor.>

MEMO:

C: DTC 22 KNOCK SENSOR S068521G59

- **DIAGNOSIS:**
  - The knock sensor signal is abnormal.
  - The harness connector between ECM and knock sensor is in short or open.
- **TROUBLE SYMPTOM:**
  - Poor driving performance

CAUTION:
After repair or replacement of faulty parts, conduct CLEAR MEMORY and INSPECTION MODES. <Ref. to EN(SOHCw/oOBD)-31 OPERATION, Clear Memory Mode.> and <Ref. to EN(SOHCw/oOBD)-29 OPERATION, Inspection Mode.>

- **WIRING DIAGRAM:**

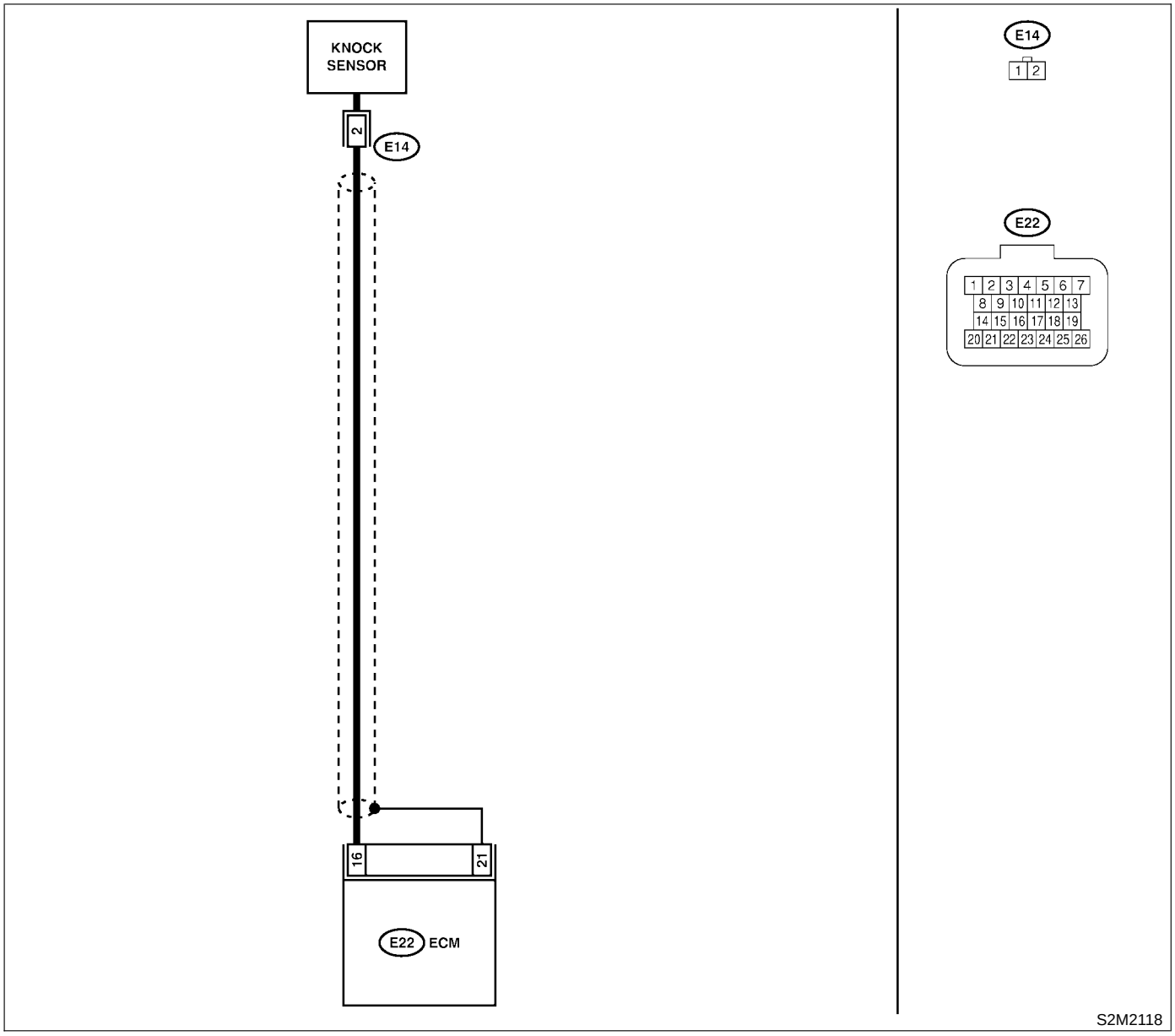

No.	Step	Check	Yes	No
1	**CHECK HARNESS BETWEEN KNOCK SENSOR AND ECM CONNECTOR.** 1) Turn ignition switch to OFF. 2) Disconnect connector from ECM. 3) Measure resistance of harness between ECM connector and engine ground. ***Connector & terminal*** ***(E22) No. 16 — Engine ground:***	Is the resistance more than 700 kΩ?	Go to step **3**.	Go to step **2**.
2	**CHECK HARNESS BETWEEN KNOCK SENSOR AND ECM CONNECTOR.** Measure resistance of harness between ECM connector and engine ground. ***Connector & terminal*** ***(E22) No. 16 — Engine ground:***	Is the resistance less than 400 kΩ?	Go to step **5**.	Go to step **6**.
3	**CHECK KNOCK SENSOR.** 1) Disconnect connector from knock sensor. 2) Measure resistance between knock sensor connector terminal and engine ground. ***Terminal*** ***No. 2 — Engine ground:***	Is the resistance more than 700 kΩ?	Go to step **4**.	Repair harness and connector. NOTE: In this case, repair the following: ● Open circuit in harness between knock sensor and ECM connector ● Poor contact in knock sensor connector
4	**CHECK CONDITION OF KNOCK SENSOR INSTALLATION.**	Is the knock sensor installation bolt tightened securely?	Replace knock sensor. <Ref. to FU(SOHCw/oOBD)-25, Knock Sensor.>	Tighten knock sensor installation bolt securely.
5	**CHECK KNOCK SENSOR.** 1) Disconnect connector from knock sensor. 2) Measure resistance between knock sensor connector terminal and engine ground. ***Terminal*** ***No. 2 — Engine ground:***	Is the resistance less than 400 kΩ?	Replace knock sensor.	Repair ground short circuit in harness between knock sensor connector and ECM connector. NOTE: The harness between both connectors is shielded. Repair short circuit of harness together with shield.

No.	Step	Check	Yes	No
6	**CHECK INPUT SIGNAL FOR ECM.** 1) Connect ST. <Ref. to EN(SOHCw/oOBD)-23, HOW TO CHECK I/O SIGNAL FOR ECM, Engine Control Module (ECM) I/O Signal.> ST 498307600 CHECK BOARD KIT 2) Turn ignition switch to ON. 3) Measure voltage between ECM and engine ground. ***Connector & terminal*** ***(B) No. 17 (+) — Engine ground (−):***	Is the voltage more than 2 V?	Even if MIL lights up, the circuit has returned to a normal condition at this time. (However, the possibility of poor contact still remains.) NOTE: In this case, repair the following: ● Poor contact in knock sensor connector ● Poor contact in ECM connector	Repair poor contact in ECM connector.

MEMO:

D: DTC 45 PRESSURE SENSOR S068521G67

- **DIAGNOSIS:**
  - The pressure sensor signal is abnormal.
  - The harness connector between ECM and pressure sensor is in short or open.
- **TROUBLE SYMPTOM:**
  - Erroneous idling
  - Engine stalls.
  - Poor driving performance

CAUTION:
After repair or replacement of faulty parts, conduct CLEAR MEMORY and INSPECTION MODES. <Ref. to EN(SOHCw/oOBD)-31 OPERATION, Clear Memory Mode.> and <Ref. to EN(SOHCw/oOBD)-29 OPERATION, Inspection Mode.>

- **WIRING DIAGRAM:**

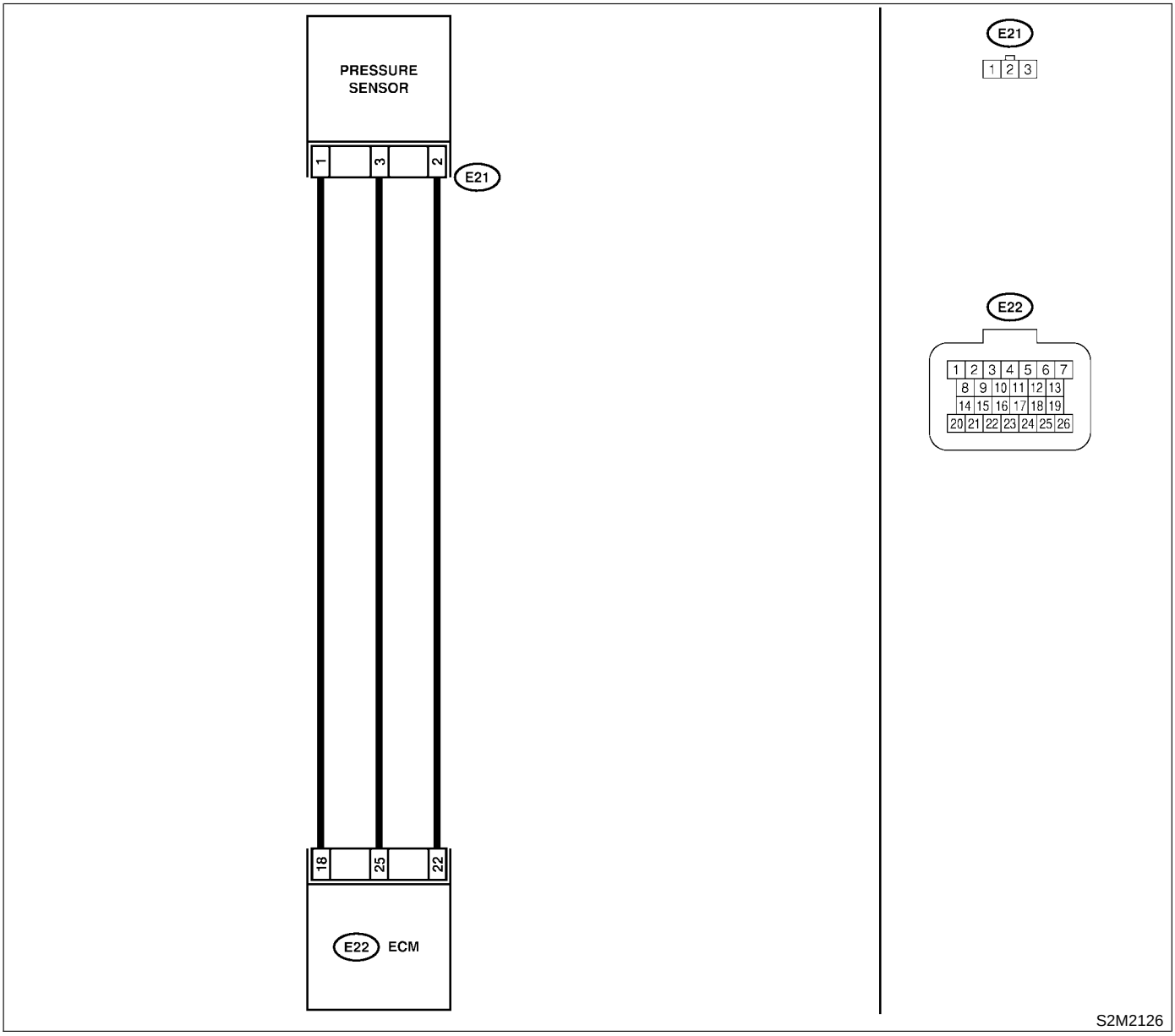

No.	Step	Check	Yes	No
1	**CHECK HARNESS BETWEEN ECM AND PRESSURE SENSOR CONNECTOR.** 1) Disconnect connector from pressure sensor. 2) Turn ignition switch to ON. 3) Measure voltage between pressure sensor connector and engine ground. ***Connector & terminal*** ***(E21) No. 3 (+) — Engine ground (–):***	Is the voltage between 4.5 V and 5.5 V?	Go to step **2**.	Repair open circuit in harness between ECM and pressure sensor.
2	**CHECK HARNESS BETWEEN ECM AND PRESSURE SENSOR CONNECTOR.** 1) Disconnect connector from ECM. 2) Measure resistance of harness between ECM and pressure sensor connector. ***Connector & terminal*** ***(E22) No. 22 — (E21) No. 2:*** ***(E22) No. 25 — (E21) No. 3:*** ***(E22) No. 18 — (E21) No. 1:***	Is the resistance less than 1 Ω?	Go to step **3**.	Repair open circuit in harness between ECM and pressure sensor connector.
3	**CHECK HARNESS BETWEEN ECM AND PRESSURE SENSOR CONNECTOR.** Measure resistance of harness between ECM connector and engine ground. ***Connector & terminal*** ***(E22) No. 25 — Engine ground:*** ***(E22) No. 18 — Engine ground:*** ***(E22) No. 22 — Engine ground:***	Is the resistance more than 1 MΩ?	Go to step **4**.	Repair ground short circuit in harness between ECM and pressure sensor connector.
4	**CHECK INPUT SIGNAL FOR ECM.** 1) Turn ignition switch to OFF. 2) Disconnect connector from ECM, then connect ST. <Ref. to EN(SOHCw/oOBD)-23, HOW TO CHECK I/O SIGNAL FOR ECM, Engine Control Module (ECM) I/O Signal.> ST 498307600 CHECK BOARD KIT 3) Turn ignition switch to ON. 4) Measure voltage between ECM and engine ground. ***Connector & terminal*** ***(A) No. 15 (+) — Engine ground (–):***	Is the voltage between 2.3 V and 2.5 V?	Go to step **5**.	Replace pressure sensor. <Ref. to FU(SOHCw/oOBD)-29, Pressure Sensor.>
5	**CHECK INPUT SIGNAL FOR ECM.** 1) Start engine, and idle it. 2) Measure voltage between ECM and engine ground. ***Connector & terminal*** ***(A) No. 15 (+) — Engine ground (–):***	Is the voltage between 1.2 V and 1.8 V?	Go to step **6**.	Replace pressure sensor. <Ref. to FU(SOHCw/oOBD)-29, Pressure Sensor.>
6	**CHECK POOR CONTACT.** Check poor contact in pressure sensor connector.	Is there poor contact in pressure sensor connector?	Repair poor contact in pressure sensor connector.	Replace pressure sensor. <Ref. to FU(SOHCw/oOBD)-29, Pressure Sensor.>

E: DTC 24 IDLE AIR CONTROL SOLENOID VALVE S068521G60

- **DIAGNOSIS:**
  - The idle air control solenoid valve is not in function.
  - The harness connector between ECM and idle air control solenoid valve is in short or open.
- **TROUBLE SYMPTOM:**
  - Erroneous idling
  - Hard to start
  - Poor driving performance

CAUTION:
After repair or replacement of faulty parts, conduct CLEAR MEMORY and INSPECTION MODES. <Ref. to EN(SOHCw/oOBD)-31 OPERATION, Clear Memory Mode.> and <Ref. to EN(SOHCw/oOBD)-29 OPERATION, Inspection Mode.>

- **WIRING DIAGRAM:**

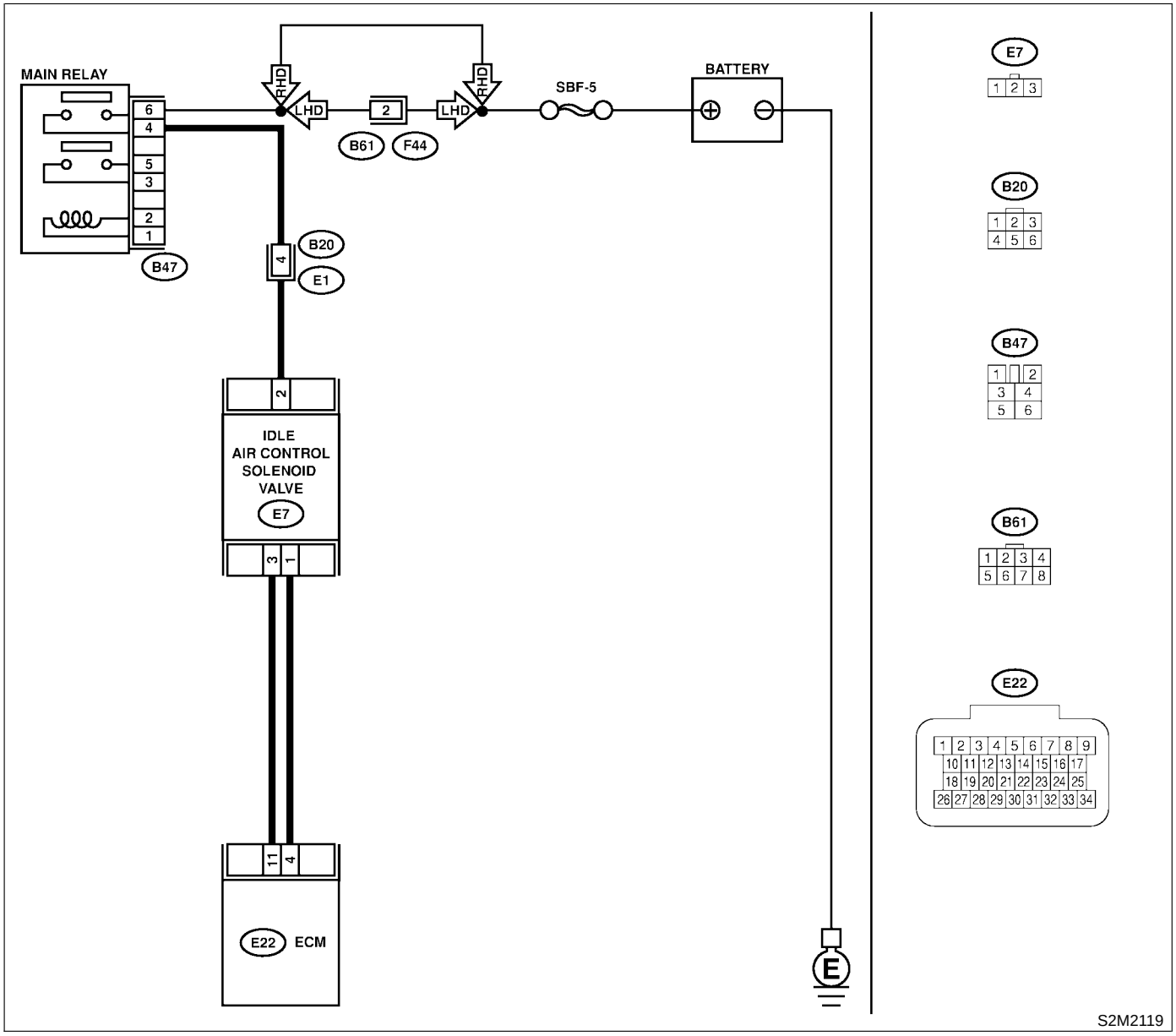

No.	Step	Check	Yes	No
1	**CHECK AIR INTAKE SYSTEM.** 1) Turn ignition switch to ON. 2) Start engine and idle it. 3) Check the following item. ● Loose installation of intake manifold, idle air control solenoid valve and throttle body ● Cracks of intake manifold gasket, idle air control solenoid valve gasket and throttle body gasket ● Loose control connection and cracks of idle air control solenoid valve by-pass hose ● Disconnection of vacuum hoses	Is there a fault in air intake system?	Repair or replace air intake system.	Go to step **2**.
2	**CHECK HARNESS BETWEEN ECM AND IDLE AIR CONTROL SOLENOID VALVE CONNECTOR.** 1) Turn ignition switch to OFF. 2) Disconnect connector from ECM and idle air control solenoid valve. 3) Measure resistance of harness between ECM and idle air control solenoid valve connector. ***Connector & terminal*** ***(E22) No. 4 — (E7) No. 1:***	Is the resistance less than 1 Ω?	Go to step **3**.	Repair open circuit in harness between ECM and idle air control solenoid valve connector.
3	**CHECK HARNESS BETWEEN ECM AND IDLE AIR CONTROL SOLENOID VALVE CONNECTOR.** Measure resistance of harness between ECM and idle air control solenoid valve connector. ***Connector & terminal*** ***(E22) No. 11 — (E7) No. 3:***	Is the resistance less than 1 Ω?	Go to step **4**.	Repair open circuit in harness between ECM and idle air control solenoid valve connector.
4	**CHECK HARNESS BETWEEN ECM AND IDLE AIR CONTROL SOLENOID VALVE CONNECTOR.** Measure resistance of harness between ECM connector and engine ground. ***Connector & terminal*** ***(E22) No. 11 — Engine ground:***	Is the resistance more than 1 MΩ?	Repair ground short in harness between ECM and idle air control solenoid valve.	Go to step **5**.
5	**CHECK HARNESS BETWEEN ECM AND IDLE AIR CONTROL SOLENOID VALVE CONNECTOR.** Measure resistance of harness between ECM connector and engine ground. ***Connector & terminal*** ***(E22) No. 4 — Engine ground:***	Is the resistance more than 1 MΩ?	Repair ground short circuit in harness between ECM and idle air control solenoid valve connector.	Go to step **6**.
6	**CHECK POOR CONTACT.** Check poor contact in ECM connector.	Is there poor contact in ECM connector?	Repair poor contact in ECM connector.	Go to step **7**.
7	**CHECK MAIN RELAY.** 1) Turn ignition switch to OFF. 2) Remove main relay. 3) Connect battery to main relay terminals No. 1 and No. 2. 4) Measure resistance between main relay terminals. ***Terminals*** ***No. 4 — No. 6:***	Is the resistance less than 10 Ω?	Go to step **8**.	Replace main relay.

No.	Step	Check	Yes	No
8	**CHECK POWER SUPPLY TO IDLE AIR CONTROL SOLENOID VALVE.** 1) Disconnect connector from idle air control solenoid valve. 2) Turn ignition switch to ON. 3) Measure voltage between idle air control solenoid valve connector and engine ground. ***Connector & terminal*** ***(E7) No. 2 (+) — Engine ground (–):***	Is the voltage more than 10 V?	Go to step **9**.	Repair harness and connector. NOTE: In this case, repair the following: ● Open circuit in harness between idle air control solenoid valve and battery ● Poor contact in coupling connector (B20)
9	**CHECK POOR CONTACT.** Check poor contact in idle air control solenoid valve connector.	Is there poor contact in idle air control solenoid valve connector?	Repair poor contact in idle air control solenoid valve connector.	Contact your Subaru distributor. NOTE: Inspection by your Subaru distributor is required, because probable cause is deterioration of multiple parts.

MEMO:

F: DTC 26 INTAKE AIR TEMPERATURE SENSOR S068521G61

- **DIAGNOSIS:**
  - The intake air temperature sensor signal is abnormal.
  - The harness connector between ECM and intake air temperature sensor is in short or open.
- **TROUBLE SYMPTOM:**
  - Hard to start
  - Erroneous idling
  - Poor driving performance

CAUTION:
After repair or replacement of faulty parts, conduct CLEAR MEMORY and INSPECTION MODES. <Ref. to EN(SOHCw/oOBD)-31 OPERATION, Clear Memory Mode.> and <Ref. to EN(SOHCw/oOBD)-29 OPERATION, Inspection Mode.>

- **WIRING DIAGRAM:**

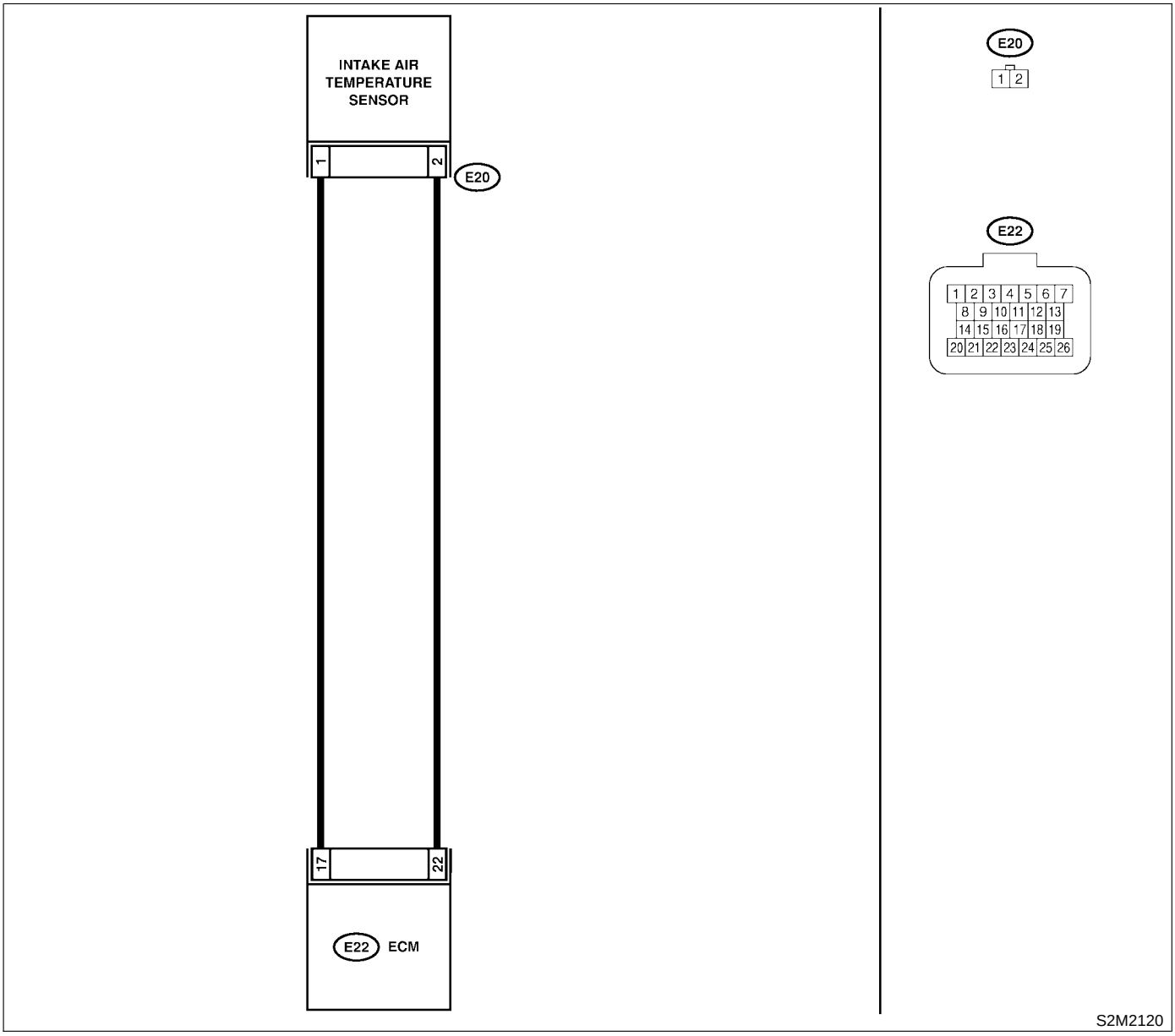

No.	Step	Check	Yes	No
1	**CHECK INTAKE AIR TEMPERATURE SENSOR.** 1) Turn ignition switch to OFF. 2) Disconnect connector from intake air temperature sensor. 3) Measure resistance between intake air temperature sensor terminals. ***Terminals*** ***No. 1 — No. 2:***	Is the resistance between 2 and 3 kΩ at 20°C (68°F)?	Go to step **2**.	Replace intake air temperature sensor. <Ref. to FU(SOHCw/oOBD)-30, Intake Air Temperature Sensor.>
2	**CHECK INTAKE AIR TEMPERATURE SENSOR.** Measure resistance between intake air temperature sensor terminals. ***Terminals*** ***No. 1 — No. 2:***	Is the resistance between 2 and 3 kΩ at 50°C (122°F)?	Go to step **3**.	Replace intake air temperature sensor. <Ref. to FU(SOHCw/oOBD)-30, Intake Air Temperature Sensor.>
3	**CHECK HARNESS BETWEEN ECM AND INTAKE AIR TEMPERATURE SENSOR CONNECTOR.** 1) Disconnect connector from ECM. 2) Measure resistance of harness connector between ECM and intake air temperature sensor connector. ***Connector & terminal*** ***(E22) No. 17 — (E20) No. 1:*** ***(E22) No. 22 — (E20) No. 2:***	Is the resistance less than 1 Ω?	Go to step **4**.	Repair open circuit in harness between ECM and intake air temperature sensor connector.
4	**CHECK HARNESS BETWEEN ECM AND INTAKE AIR TEMPERATURE SENSOR CONNECTOR.** Measure resistance of harness between ECM connector and engine ground. ***Connector & terminal*** ***(E22) No. 17 — Engine ground:*** ***(E22) No. 22 — Engine ground:***	Is the resistance more than 1 MΩ?	Go to step **5**.	Repair ground short circuit in harness between ECM and idle air control solenoid valve connector.
5	**CHECK POOR CONTACT.** Check poor contact in ECM connector.	Is there poor contact in ECM connector?	Repair poor contact in ECM connector.	Contact your Subaru distributor. NOTE: Inspection by your Subaru distributor is required, because probable cause is deterioration of multiple parts.

G: DTC 31 THROTTLE POSITION SENSOR S068521G62

- **DIAGNOSIS:**
  - The throttle position sensor signal is abnormal.
  - The throttle position sensor is installed abnormally.
  - The harness connector between ECM and throttle position sensor is in short or open.
- **TROUBLE SYMPTOM:**
  - Erroneous idling
  - Engine stalls
  - Poor driving performance

CAUTION:
After repair or replacement of faulty parts, conduct CLEAR MEMORY and INSPECTION MODES. <Ref. to EN(SOHCw/oOBD)-31 OPERATION, Clear Memory Mode.> and <Ref. to EN(SOHCw/oOBD)-29 OPERATION, Inspection Mode.>

- **WIRING DIAGRAM:**

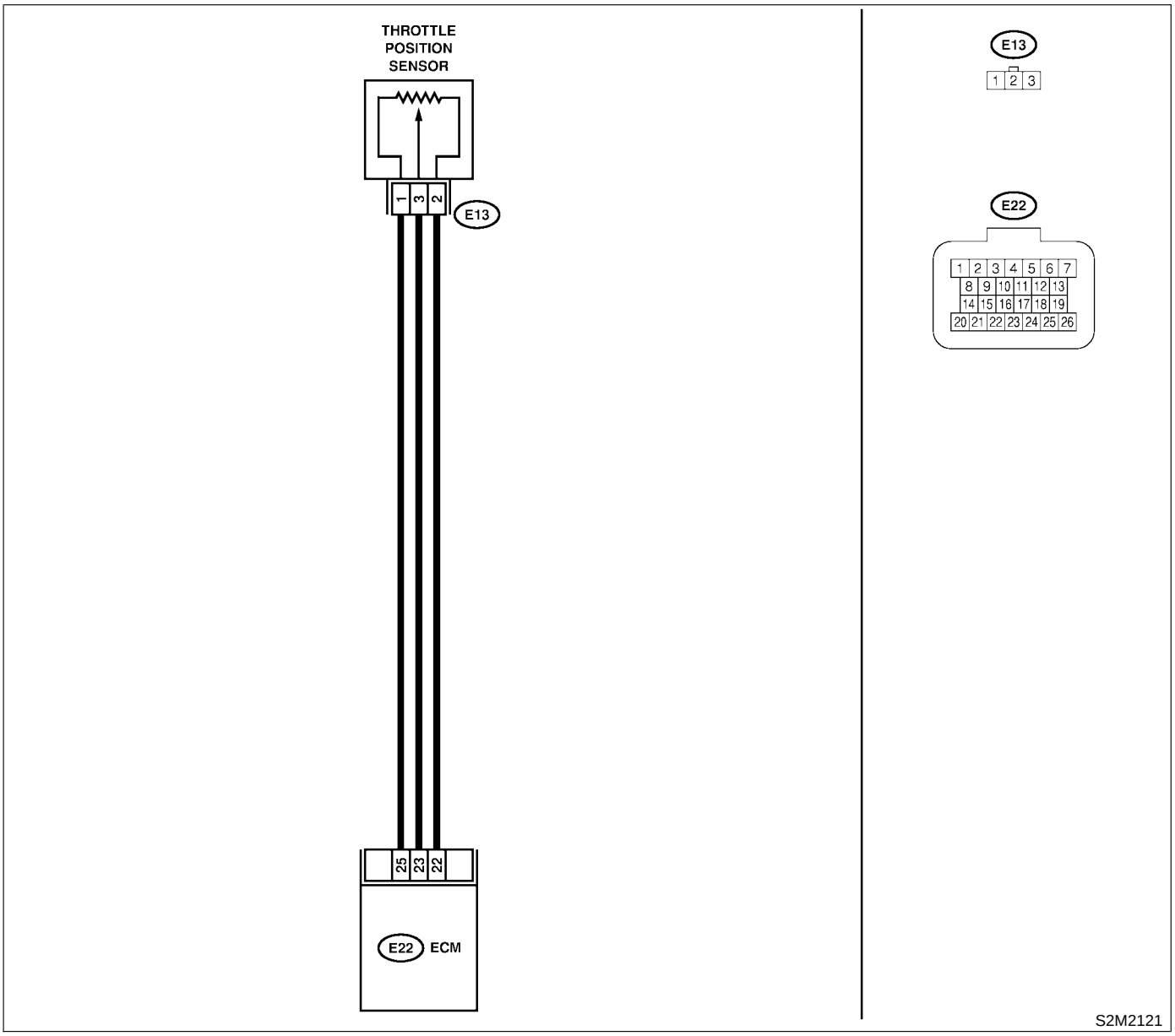

No.	Step	Check	Yes	No
1	**CHECK INPUT SIGNAL FOR ECM.** 1) Turn ignition switch to OFF. 2) Disconnect connector from ECM, then connect ST. <Ref. to EN(SOHCw/oOBD)-23, HOW TO CHECK I/O SIGNAL FOR ECM, Engine Control Module (ECM) I/O Signal.> ST 498307600 CHECK BOARD KIT 3) Turn ignition switch to ON. 4) Measure voltage between ECM and engine ground while throttle valve is fully closed. ***Connector & terminal*** ***(B) No. 23 (+) — Engine ground (−):***	Is the voltage more than 4.5 V?	Go to step **3**.	Go to step **2**.
2	**CHECK INPUT SIGNAL FOR ECM.** Measure voltage between ECM and engine ground. ***Connector & terminal*** ***(B) No. 23 (+) — Engine ground (−):***	Does the voltage change more than 4.5 V by shaking harness and connector of ECM while monitoring the value with voltage meter?	Repair poor contact in ECM connector.	Contact your Subaru distributor. NOTE: Inspection by your Subaru distributor is required, because probable cause is deterioration of multiple parts.
3	**CHECK INPUT SIGNAL FOR ECM.** Measure voltage between ECM connector and engine ground. ***Connector & terminal*** ***(B) No. 24 (+) — Engine ground (−):***	Is the voltage less than 0.1 V?	Go to step **4**.	Repair poor contact in ECM connector.
4	**CHECK HARNESS BETWEEN ECM AND THROTTLE POSITION SENSOR CONNECTOR.** 1) Turn ignition switch to OFF. 2) Disconnect connectors from throttle position sensor. 3) Turn ignition switch to ON. 4) Measure voltage between throttle position sensor connector and engine ground. ***Connector & terminal*** ***(E13) No. 3 (+) — Engine ground (−):***	Is the voltage more than 4.5 V?	Go to step **5**.	Repair harness and connector. NOTE: In this case, repair the following: ● Open circuit in harness between throttle position sensor and ECM connector ● Poor contact in throttle position sensor connector ● Poor contact in ECM connector
5	**CHECK HARNESS BETWEEN ECM AND THROTTLE POSITION SENSOR CONNECTOR.** 1) Turn ignition switch to OFF. 2) Disconnect ECM connector from CHECK BOARD. 3) Measure resistance of harness between ECM and throttle position sensor connector. ***Connector & terminal*** ***(E22) No. 22 — (E13) No. 2:***	Is the resistance less than 1 Ω?	Go to step **6**.	Repair harness and connector. NOTE: In this case, repair the following: ● Open circuit in harness between throttle position sensor and ECM connector ● Poor contact in ECM connector ● Poor contact in throttle position sensor connector

No.	Step	Check	Yes	No
6	**CHECK HARNESS BETWEEN ECM AND THROTTLE POSITION SENSOR CONNECTOR.** Measure resistance of harness between throttle position sensor connector and engine ground. ***Connector & terminal*** ***(E13) No. 2 — Engine ground:***	Is the resistance less than 10 Ω?	Repair ground short circuit in harness between throttle position sensor and ECM connector.	Go to step **7**.
7	**CHECK POOR CONTACT.** Check poor contact in throttle position sensor connector.	Is there poor contact in throttle position sensor connector?	Repair poor contact in throttle position sensor connector.	Go to step **8**.
8	**CHECK CONDITION OF THROTTLE POSITION SENSOR INSTALLATION.**	Are the throttle position sensor installing screws tightened securely?	Replace throttle position sensor.	Adjust throttle position sensor and tighten throttle position sensor installing screws securely.

MEMO:

H: DTC 32 OXYGEN SENSOR S068521G63

- **DIAGNOSIS:**
  - The oxygen sensor is not in function.
  - The harness connector between ECM and oxygen sensor is in short or open.
- **TROUBLE SYMPTOM:**
  - Failure of engine to start
  - Erroneous idling
  - Poor driving performance
  - Engine stalls.
  - Idle mixture is out of specifications.

CAUTION:
After repair or replacement of faulty parts, conduct CLEAR MEMORY and INSPECTION MODES. <Ref. to EN(SOHCw/oOBD)-31 OPERATION, Clear Memory Mode.> and <Ref. to EN(SOHCw/oOBD)-29 OPERATION, Inspection Mode.>

- **WIRING DIAGRAM:**

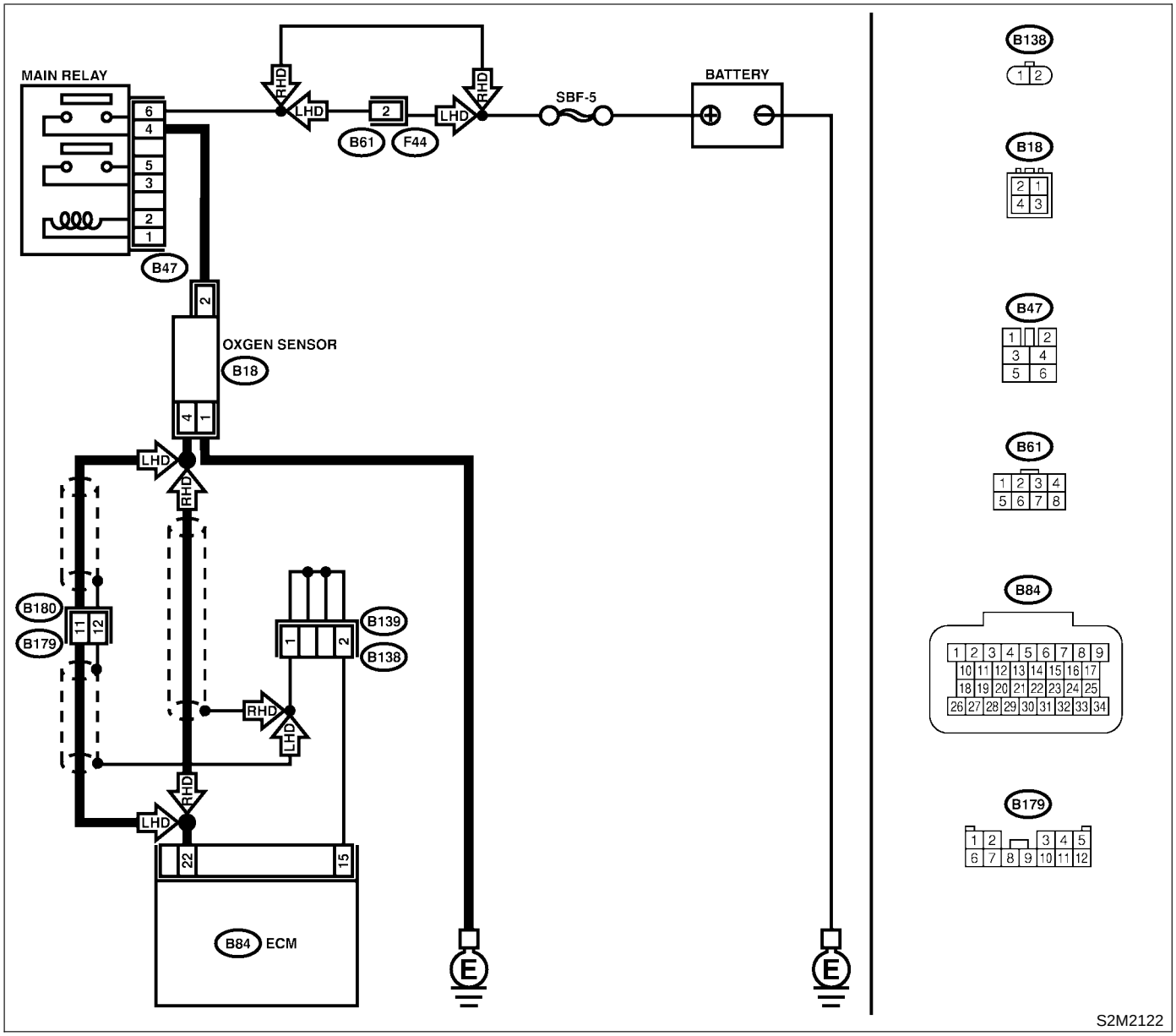

No.	Step	Check	Yes	No
1	**CHECK FOR OTHER CAUSES AFFECTING EXHAUST GAS.** NOTE: ● Check for use of improper fuel. ● Check if engine oil or coolant level is extremely low.	Is CO% more than 2% after engine warm-up?	Check fuel system.	Go to step **2**.
2	**CHECK EXHAUST SYSTEM.**	Is there a fault in exhaust system?	Repair exhaust system. NOTE: ● Loose installation of front portion of exhaust pipe onto cylinder heads ● Loose connection between front exhaust pipe and front catalytic converter ● Damage of exhaust pipe resulting in hole	Go to step **3**.
3	**CHECK HARNESS BETWEEN OXYGEN SENSOR AND ECM CONNECTOR.** 1) Turn ignition switch to OFF. 2) Disconnect connector from oxygen sensor. 3) Turn ignition switch to ON. 4) Measure voltage between front oxygen sensor harness connector and engine ground. ***Connector & terminal*** ***(B18) No. 4 (+) — Engine ground (−):***	Is the voltage more than 0.2 V?	Go to step **4**.	Repair harness and connector. NOTE: In this case, repair the following: ● Open circuit in harness between ECM and oxygen sensor connector ● Poor contact in the ECM connector
4	**CHECK POOR CONTACT.** Check poor contact in oxygen sensor connector.	Is there poor contact in oxygen sensor connector?	Repair poor contact in oxygen sensor connector.	Go to step **5**.
5	**CHECK MAIN RELAY.** 1) Turn ignition switch to OFF. 2) Remove main relay. 3) Connect battery to main relay terminals No. 1 and No. 2. 4) Measure resistance between main relay terminals. ***Terminals*** ***No. 4 — No. 6:***	Is the resistance less than 10 Ω?	Go to step **6**.	Replace main relay.

No.	Step	Check	Yes	No
6	**CHECK POWER SUPPLY TO OXYGEN SENSOR.** 1) Turn ignition switch to ON. 2) Measure voltage between oxygen sensor connector. ***Connector & terminal*** ***(B18) No. 2 (+) — Engine ground (−):***	Is the voltage more than 10 V?	Go to step **7**.	Repair power supply line. NOTE: In this case, repair the following: ● Open circuit in harness between battery and oxygen sensor connector ● Poor contact in oxygen sensor connector ● Poor contact in main relay connector
7	**CHECK OXYGEN SENSOR.** 1) Turn ignition switch to OFF. 2) Measure resistance between oxygen sensor terminals. ***Terminals*** ***No. 1 — No. 2:***	Is the resistance less than 30 Ω?	Repair poor contact. NOTE: In this case, repair the following: ● Poor contact in ECM connector ● Poor contact in oxygen sensor connector	Replace oxygen sensor. <Ref. to FU(SOHCw/oOBD)-36, Oxygen Sensor.>

MEMO:

I: DTC 33 VEHICLE SPEED SIGNAL S068521G64

- **DIAGNOSIS:**
  - The vehicle speed signal is abnormal.
  - The harness connector between ECM and vehicle speed sensor is in short or open.
- **TROUBLE SYMPTOM:**
  - Erroneous idling
  - Engine stalls.
  - Poor driving performance

CAUTION:
After repair or replacement of faulty parts, conduct CLEAR MEMORY and INSPECTION MODES. <Ref. to EN(SOHCw/oOBD)-31 OPERATION, Clear Memory Mode.> and <Ref. to EN(SOHCw/oOBD)-29 OPERATION, Inspection Mode.>

- **WIRING DIAGRAM:**

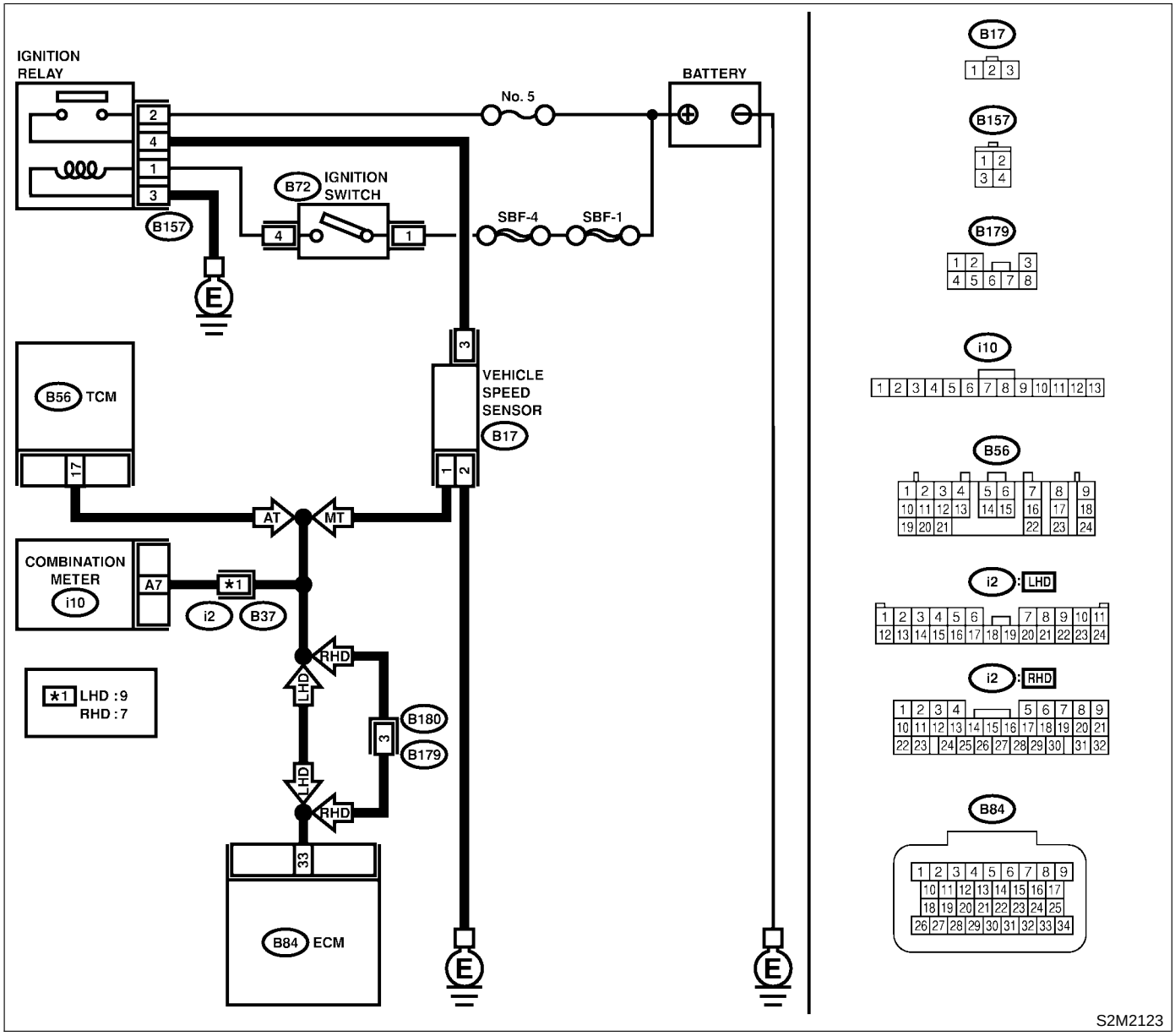

No.	Step	Check	Yes	No
1	**CHECK SPEEDOMETER OPERATION IN COMBINATION METER.**	Does speedometer operate normally?	Go to step **2**.	Check speedometer and vehicle speed sensor. <Ref. to IDI-7, INSPECTION, Combination Meter System.>
2	**CHECK INPUT SIGNAL FOR ECM.** 1) Disconnect connector from ECM, then connect ST. <Ref. to EN(SOHCw/oOBD)-23, HOW TO CHECK I/O SIGNAL FOR ECM, Engine Control Module (ECM) I/O Signal.> ST 498307600 CHECK BOARD KIT 2) Lift-up the vehicle. 3) Set the positive (+) terminal and earth lead of the oscilloscope at ECM connector terminals. ***Connector & terminal*** ***(D) No. 53 — Engine ground:*** 4) Start the engine. 5) Shift the gear position, and travel at a constant speed. 6) Measure the signal voltage indicated on the oscilloscope.	Is the voltage more than 3 V?	Go to step **3**.	Go to step **4**.
3	**CHECK POOR CONTACT.** Check for poor contact at ECM connector.	Is there poor contact at the ECM connector?	Repair poor contact at ECM.	Replace ECM. <Ref. to FU(SOHCw/oOBD)-38, Engine Control Module.>
4	**CHECK HARNESS BETWEEN ECM AND COMBINATION METER CONNECTOR.** Measure voltage between ECM and engine ground. ***Connector & terminal*** ***(D) No. 53 (+) — Engine ground (−):***	Is the voltage more than 2 V?	Repair harness and connector. NOTE: In this case, repair the following: ● Battery short circuit in harness between ECM and combination meter connector	Go to step **5**.
5	**CHECK HARNESS BETWEEN ECM AND COMBINATION METER CONNECTOR.** 1) Turn ignition switch to OFF. 2) Disconnect check board. 3) Measure resistance of harness between ECM connector and engine ground. ***Connector & terminal*** ***(B84) No. 33 — Engine ground:***	Is the resistance less than 10 Ω?	Repair ground short circuit in harness between ECM and combination meter connector.	Go to step **6**.
6	**CHECK POOR CONTACT.** Check poor contact in ECM connector.	Is there poor contact in ECM connector?	Repair poor contact in ECM.	Replace ECM. <Ref. to FU(SOHCw/oOBD)-38, Engine Control Module.>

J: DTC 35 PURGE CONTROL SOLENOID VALVE S068521G65

- **DIAGNOSIS:**
  - The purge control solenoid valve is not in function.
  - The harness connector between ECM and purge control solenoid valve is in short or open.
- **TROUBLE SYMPTOM:**
  - Erroneous idling

CAUTION:
After repair or replacement of faulty parts, conduct CLEAR MEMORY and INSPECTION MODES. <Ref. to EN(SOHCw/oOBD)-31 OPERATION, Clear Memory Mode.> and <Ref. to EN(SOHCw/oOBD)-29 OPERATION, Inspection Mode.>

- **WIRING DIAGRAM:**

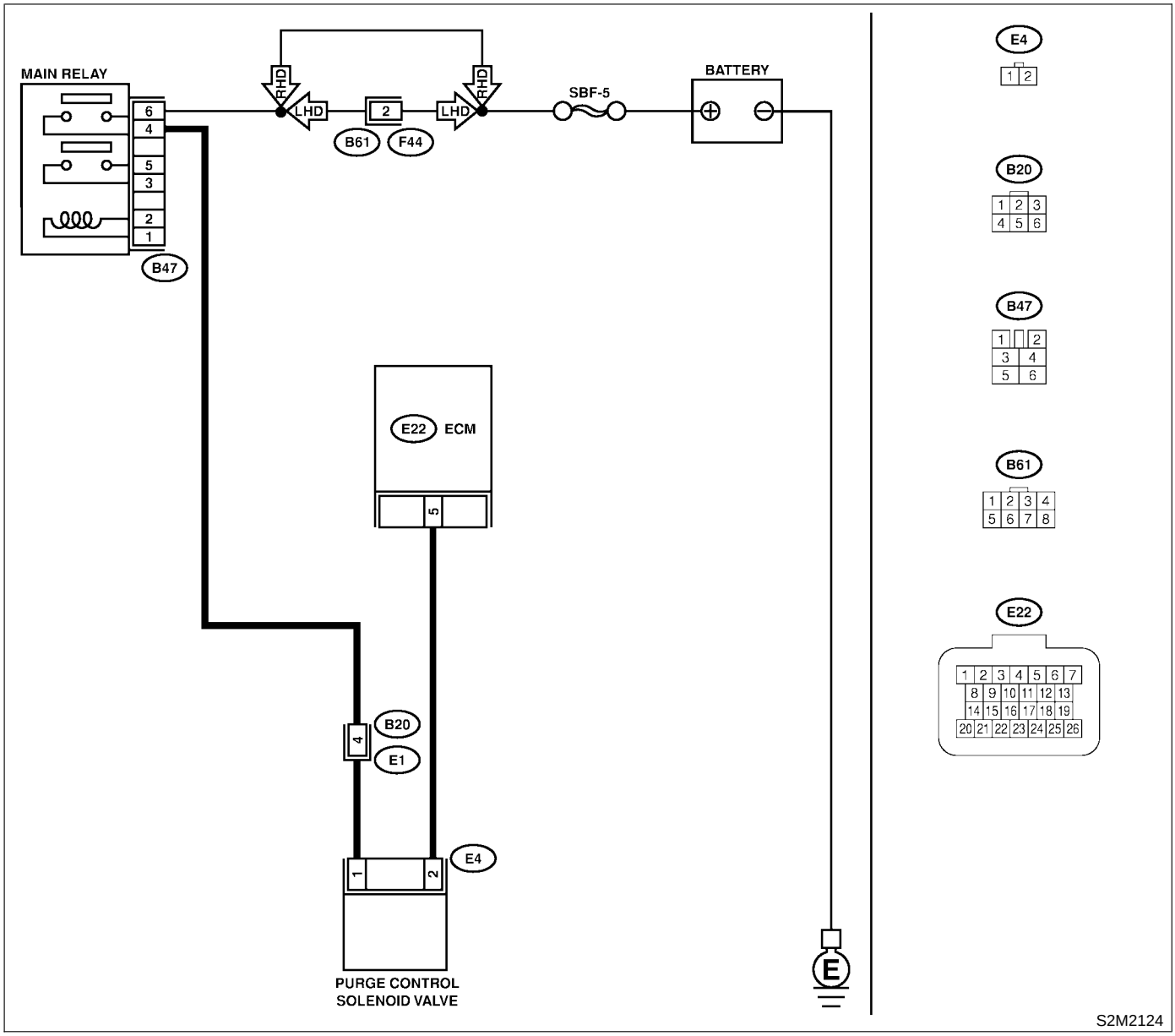

No.	Step	Check	Yes	No
1	**CHECK OPERATION SOUND OF PURGE CONTROL SOLENOID VALVE.** 1) Turn ignition switch to OFF. 2) Connect test mode connector. 3) Turn ignition switch to ON. 4) Make sure that the ON/OFF operating sound of purge control solenoid valve occurs at about 10 Hz.	Does purge control solenoid valve produce operating sound?	Go to step **2**.	Go to step **3**.
2	**CHECK POOR CONTACT.** Check poor contact in ECM connector.	Is there poor contact in ECM connector?	Repair poor contact in ECM.	Replace ECM. <Ref. to FU(SOHCw/oOBD)-38, Engine Control Module.>
3	**CHECK HARNESS BETWEEN PURGE CONTROL SOLENOID VALVE AND ECM CONNECTOR.** 1) Turn ignition switch to OFF. 2) Disconnect test mode connector. 3) Disconnect connector from ECM, then connect ST. <Ref. to EN(SOHCw/oOBD)-23, HOW TO CHECK I/O SIGNAL FOR ECM, Engine Control Module (ECM) I/O Signal.> ST 498307600 CHECK BOARD KIT 4) Disconnect connector from purge control solenoid valve. 5) Turn ignition switch to ON. 6) Measure voltage between ECM and engine ground. ***Connector & terminal*** ***(A) No. 3 (+) — Engine ground (–):***	Is the voltage more than 10 V?	Repair battery short circuit in harness between ECM and purge control solenoid valve connector. After repair, replace ECM.	Go to step **4**.
4	**CHECK HARNESS BETWEEN PURGE CONTROL SOLENOID VALVE AND ECM CONNECTOR.** 1) Turn ignition switch to OFF. 2) Disconnect ECM connector from CHECK BOARD. 3) Measure resistance of harness between ECM and purge control solenoid valve of harness connector. ***Connector & terminal*** ***(E22) No. 5 — (E4) No. 2:***	Is the resistance less than 1 Ω?	Go to step **5**.	Repair open circuit in harness between ECM and purge control solenoid valve connector.
5	**CHECK PURGE CONTROL SOLENOID VALVE.** 1) Remove purge control solenoid valve. 2) Measure resistance between purge control solenoid valve terminals. ***Terminal*** ***No. 1 — No. 2:***	Is the resistance between 23 and 27 Ω?	Go to step **6**.	Replace purge control solenoid valve. <Ref. to EC(SOHCw/oOBD)-7, Purge Control Solenoid Valve.>
6	**CHECK MAIN RELAY.** 1) Turn ignition switch to OFF. 2) Remove main relay. 3) Connect battery to main relay terminals No. 1 and No. 2. 4) Measure resistance between main relay terminals. ***Terminals*** ***No. 4 — No. 6:***	Is the resistance less than 10 Ω?	Go to step **7**.	Replace main relay.

No.	Step	Check	Yes	No
7	**CHECK POWER SUPPLY TO PURGE CONTROL SOLENOID VALVE.** 1) Turn ignition switch to ON. 2) Measure voltage between purge control solenoid valve and engine ground. ***Connector & terminal*** ***(E4) No. 1 (+) — Engine ground (−):***	Is the voltage more than 10 V?	Go to step **8**.	Repair harness and connector. NOTE: In this case, repair the following: ● Open circuit in harness between battery and purge control solenoid valve connector ● Poor contact in main relay connector ● Poor contact in coupling connector (B20)
8	**CHECK POOR CONTACT.** Check poor contact in purge control solenoid valve connector.	Is there poor contact in purge control solenoid valve connector?	Repair poor contact in purge control solenoid valve connector.	Contact your Subaru distributor. NOTE: Inspection by your Subaru distributor is required, because probable cause is deterioration of multiple parts.

MEMO:

K: DTC 38 TORQUE CONTROL SIGNAL S068521G66

- **DIAGNOSIS:**
  - Abnormal signal entered from TCM
  - The harness connector between ECM and TCM is in short.

CAUTION:
After repair or replacement of faulty parts, conduct CLEAR MEMORY and INSPECTION MODES. <Ref. to EN(SOHCw/oOBD)-31 OPERATION, Clear Memory Mode.> and <Ref. to EN(SOHCw/oOBD)-29 OPERATION, Inspection Mode.>

- **WIRING DIAGRAM:**

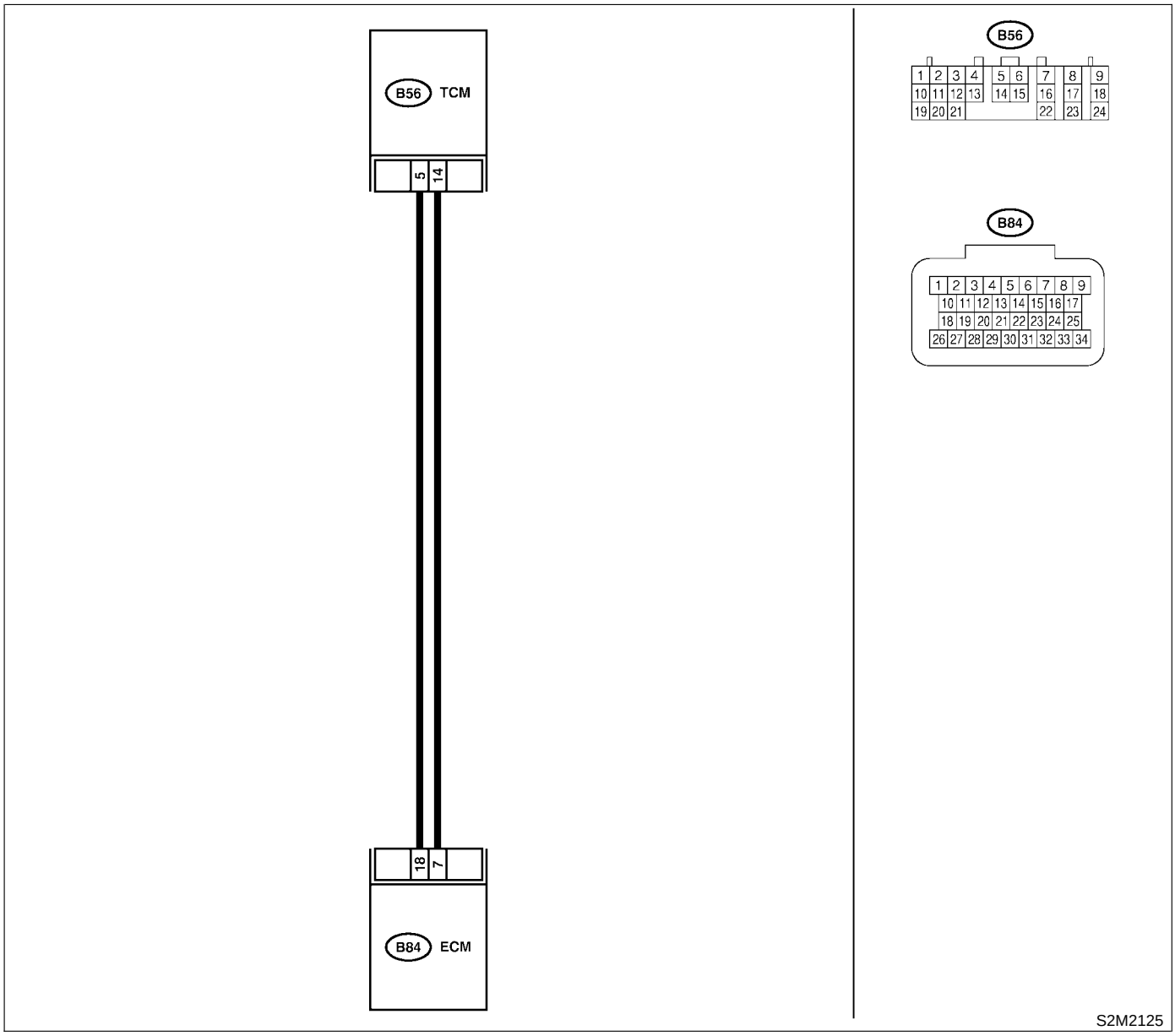

No.	Step	Check	Yes	No
1	**CHECK HARNESS BETWEEN ECM AND TCM CONNECTOR.** 1) Disconnect connectors from ECM and TCM. 2) Measure resistance of harness between ECM and engine ground. ***Connector & terminal*** ***(B84) No. 7 — Engine ground:***	Is the resistance less than 10 Ω?	Repair ground short circuit in harness between ECM and TCM connector.	Go to step **2**.
2	**CHECK HARNESS BETWEEN ECM AND TCM CONNECTOR.** Measure resistance of harness between ECM and engine ground. ***Connector & terminal*** ***(B84) No. 18 — Engine ground:***	Is there resistance less than 10 Ω?	Repair ground short circuit in harness between ECM and TCM connector.	Replace TCM. <Ref. to AT-48 Transmission Control Module (TCM).>

L: DTC 46 CO RESISTOR (GENERAL SPEC. VEHICLES) S068521G68

- **DIAGNOSIS:**
  - The CO resistor signal is abnormal.
  - The harness connector between ECM and CO resistor is in short or open.
  - The CO value is not adjusted to specifications.
- **TROUBLE SYMPTOM:**
  - Erroneous idling
  - Mixture ratio is too rich or too lean.

CAUTION:
After repair or replacement of faulty parts, conduct CLEAR MEMORY and INSPECTION MODES. <Ref. to EN(SOHCw/oOBD)-31 OPERATION, Clear Memory Mode.> and <Ref. to EN(SOHCw/oOBD)-29 OPERATION, Inspection Mode.>

- **WIRING DIAGRAM:**

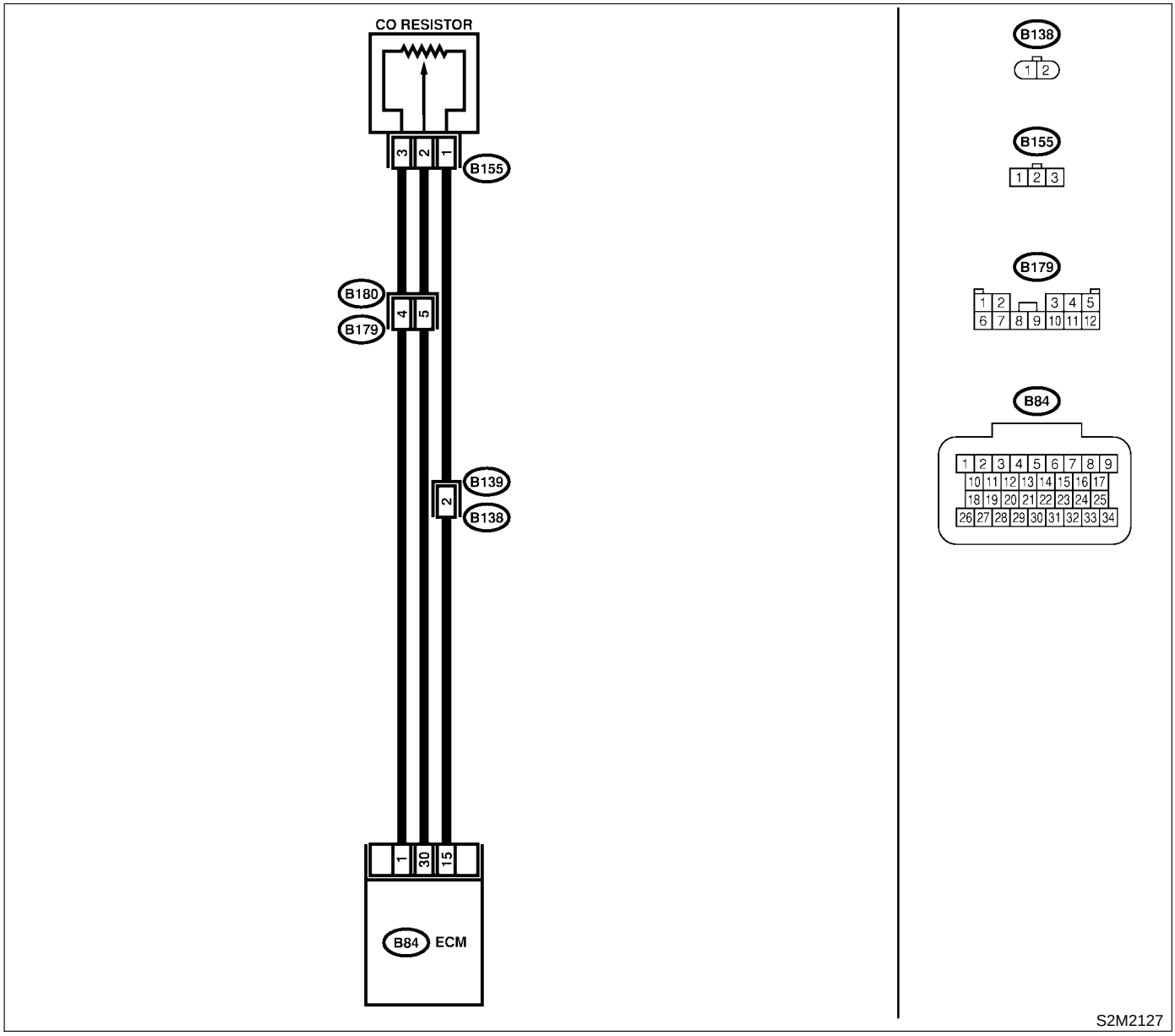

No.	Step	Check	Yes	No
1	**CHECK INPUT SIGNAL FOR ECM.** 1) Turn ignition switch to OFF. 2) Disconnect connector from ECM, then connect ST. <Ref. to EN(SOHCw/oOBD)-23, HOW TO CHECK I/O SIGNAL FOR ECM, Engine Control Module (ECM) I/O Signal.> ST 498307600 CHECK BOARD KIT 3) Turn ignition switch to ON. 4) Measure voltage between ECM and engine ground. ***Connector & terminal*** ***(D) No. 56 (+) — Engine ground (−):***	Is the voltage between 0.5 V and 4.5 V?	Go to step **3**.	Go to step **2**.
2	**CHECK POOR CONTACT.**	Is there poor contact in ECM connector?	Repair poor contact in ECM connector.	Replace ECM. <Ref. to FU(SOHCw/oOBD)-38, Engine Control Module.>
3	**CHECK HARNESS BETWEEN CO RESISTOR AND ECM CONNECTOR.** 1) Turn ignition switch to OFF. 2) Disconnect connector from ECM and CO resistor. 3) Measure resistance of harness between ECM and CO resistor connector. ***Connector & terminal*** ***(B84) No. 1 — (B155) No. 3:*** ***(B84) No. 30 — (B155) No. 2:*** ***(B84) No. 15 — (B155) No. 1:***	Is the resistance less than 1 Ω?	Go to step **4**.	Repair open circuit in harness between ECM and CO resistor connector.
4	**CHECK HARNESS BETWEEN CO RESISTOR AND ECM CONNECTOR.** Measure resistance of harness between ECM connector and engine ground. ***Connector & terminal*** ***(B84) No. 1 — Engine ground:*** ***(B84) No. 30 — Engine ground:*** ***(B84) No. 15 — Engine ground:***	Is the resistance more than 1 MΩ?	Go to step **5**.	Repair short circuit in harness between ECM and CO resistor connector.
5	**CHECK CO RESISTOR.** Measure resistance between CO resistor terminals. ***Terminals*** ***No. 1 — No. 3:***	Is the resistance between 4 and 6 kΩ?	Go to step **6**.	Replace CO resistor.
6	**CHECK CO RESISTOR.** Measure variable resistance between CO resistor terminals while rotating the screw of CO resistor. ***Terminals*** ***No. 1 — No. 2:***	Is the resistance between 0 and 6 kΩ?	Replace ECM.	Replace CO resistor. NOTE: Ensure resistance varies in response to screw rotation.

M: DTC 51 NEUTRAL POSITION SWITCH S068521H58

- **DIAGNOSIS:**
  - The neutral position switch signal is abnormal.
  - The harness connector between ECM and neutral position switch is in short or open.
- **TROUBLE SYMPTOM:**
  - Erroneous idling

CAUTION:
After repair or replacement of faulty parts, conduct CLEAR MEMORY and INSPECTION MODES. <Ref. to EN(SOHCw/oOBD)-31 OPERATION, Clear Memory Mode.> and <Ref. to EN(SOHCw/oOBD)-29 OPERATION, Inspection Mode.>

- **WIRING DIAGRAM:**

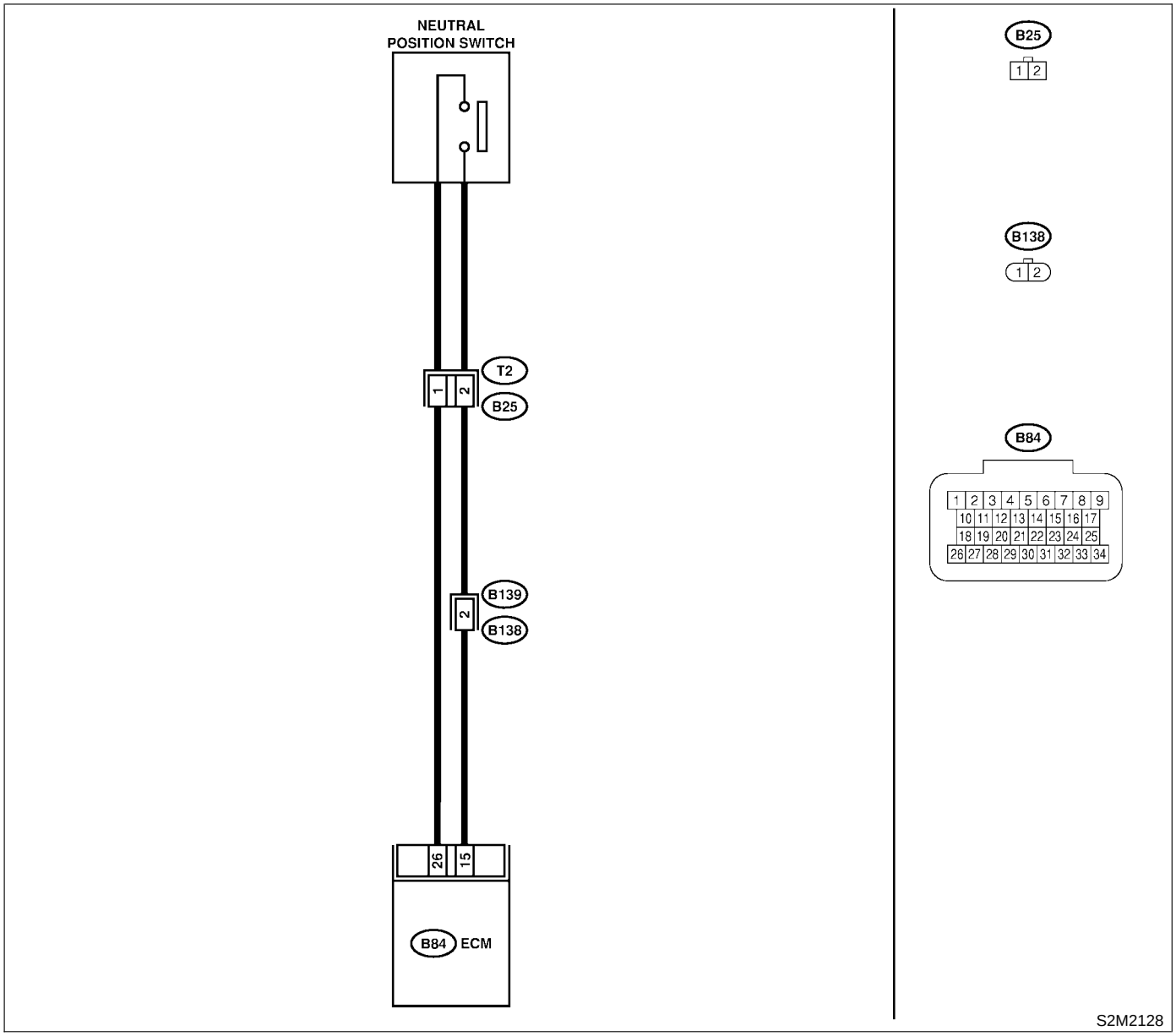

No.	Step	Check	Yes	No
1	**CHECK INPUT SIGNAL FOR ECM.** 1) Turn ignition switch to OFF. 2) Disconnect connector from ECM, then connect ST. <Ref. to EN(SOHCw/oOBD)-23, HOW TO CHECK I/O SIGNAL FOR ECM, Engine Control Module (ECM) I/O Signal.> ST 498307600 CHECK BOARD KIT 3) Turn ignition switch to ON. 4) Measure voltage between ECM and engine ground. ***Connector & terminal*** ***(D) No. 60 (+) — Engine ground (−):***	Is the voltage between 4.5 and 5.5 V in neutral position?	Go to step **2**.	Go to step **4**.
2	**CHECK INPUT SIGNAL FOR ECM.** Measure voltage between ECM and engine ground. ***Connector & terminal*** ***(D) No. 60 (+) — Engine ground (−):***	Is the voltage less than 1 V in other positions?	Go to step **3**.	Go to step **4**.
3	**CHECK POOR CONTACT.** Check poor contact in ECM connector.	Is there poor contact in ECM connector?	Repair poor contact in ECM connector.	Contact your Subaru distributor.
4	**CHECK NEUTRAL POSITION SWITCH.** 1) Turn ignition switch to OFF. 2) Disconnect connector from transmission harness. 3) Measure resistance between transmission harness and connector terminals. ***Connector & terminal*** ***(T2) No. 1 — No. 2:***	Is the resistance more than 1 MΩ in neutral position?	Go to step **5**.	Repair short circuit in transmission harness or replace neutral position switch.
5	**CHECK NEUTRAL POSITION SWITCH.** Measure resistance between transmission harness connector terminals. ***Connector & terminal*** ***(T2) No. 1 — No. 2:***	Is the resistance less than 1 Ω in other positions?	Go to step **6**.	Repair open circuit in transmission harness or replace neutral position switch.
6	**CHECK HARNESS BETWEEN ECM AND NEUTRAL POSITION SWITCH CONNECTOR.** 1) Disconnect ECM connector from CHECK BOARD. 2) Measure resistance of harness between ECM and transmission harness connector. ***Connector & terminal*** ***(B84) No. 26 — (B25) No. 1:***	Is the resistance less than 1 Ω?	Go to step **7**.	Repair open circuit in harness between ECM and transmission harness connector.
7	**CHECK HARNESS BETWEEN ECM AND NEUTRAL POSITION SWITCH CONNECTOR.** Measure resistance between ECM connector and engine ground. ***Connector & terminal*** ***(B84) No. 26 — Engine ground:***	Is the resistance less than 10 Ω?	Repair ground short circuit in harness between ECM and transmission harness connector.	Go to step **8**.

No.	Step	Check	Yes	No
8	**CHECK NEUTRAL POSITION SWITCH GROUND CIRCUIT.** Measure resistance of harness between transmission harness connector and engine ground. ***Connector & terminal*** ***(B25) No. 2 — Engine ground:***	Is the resistance less than 5 Ω?	Go to step **9**.	Repair harness and connector. NOTE: In this case, repair the following: ● Open circuit in harness between transmission harness connector and engine grounding terminal ● Poor contact in coupling connector (B138)
9	**CHECK POOR CONTACT.** Check poor contact in transmission harness connector.	Is there poor contact in transmission harness connector?	Repair poor contact in transmission harness connector.	Contact your Subaru distributor. NOTE: Inspection by your Subaru distributor is required, because probable cause is deterioration of multiple parts.

MEMO:

N: DTC 54 — AIR INTAKE SYSTEM — S068521H59

- **DIAGNOSIS:**
  - Intake duct, hose, nipple, etc., looseness, displacement, detachment
- **TROUBLE SYMPTOM:**
  - High idling revs
  - Poor engine pick up

CAUTION:
After repair or replacement of faulty parts, conduct CLEAR MEMORY and INSPECTION MODES. <Ref. to EN(SOHCw/oOBD)-31, Clear Memory Mode.>, <Ref. to EN(SOHCw/oOBD)-29, Inspection Mode.>

- **WIRING DIAGRAM:**

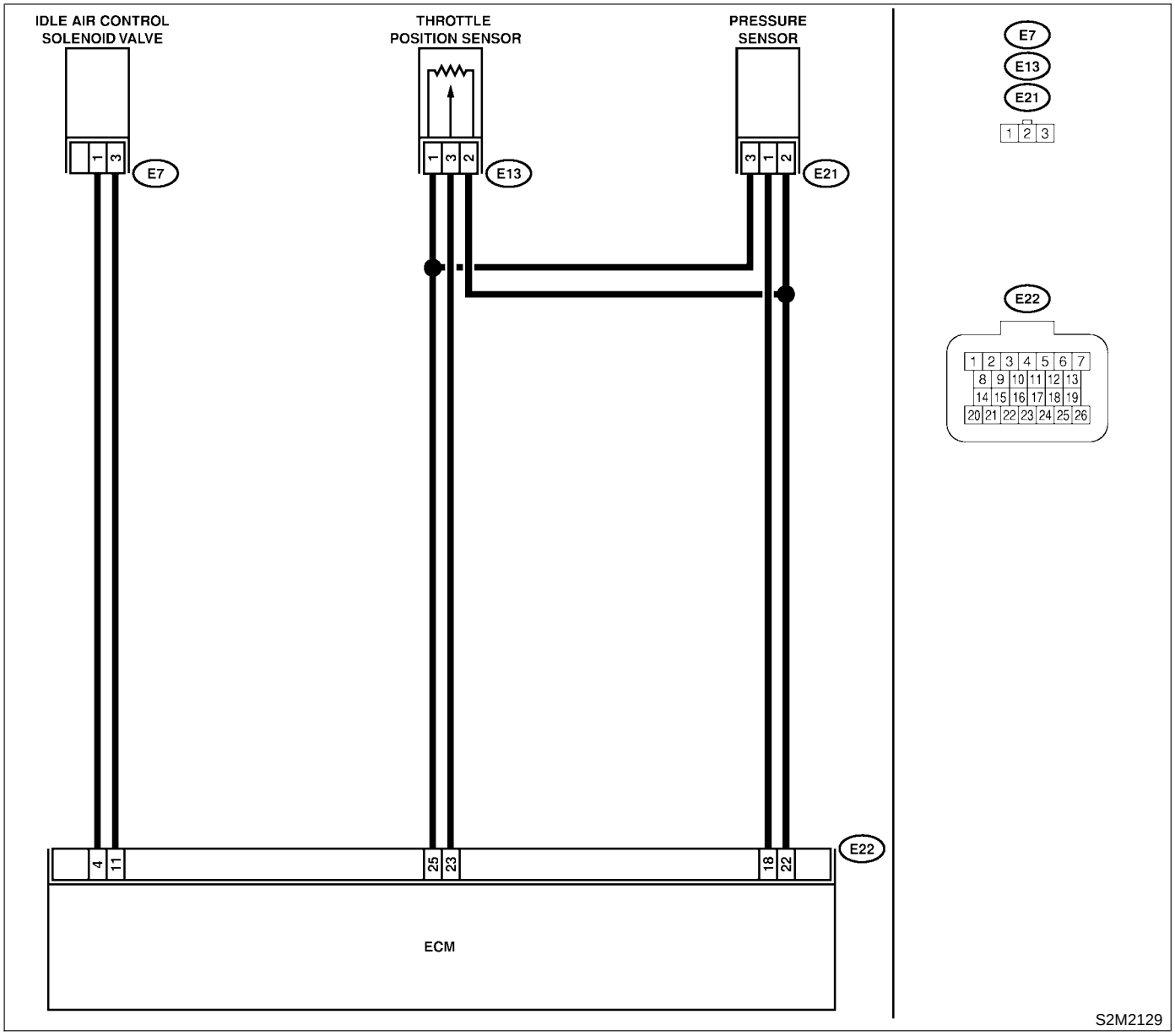

No.	Step	Check	Yes	No
1	**CHECK AIR INTAKE SYSTEM.** 1) Turn ignition switch to ON. 2) Start engine, and idle it. 3) Check the following items: ● Cracks of air intake duct ● Disconnections of air intake duct ● Check for looseness, displacement of the intake manifold. ● Check that the intake manifold is connected in the instructed manner. (Gasket detachment, insufficient fastening torque of nuts and bolts) ● Check for looseness, detachment of hose, nipple etc.	Is there a fault in the air intake system?	Repair or replace air intake system.	Go to step **2**.
2	**CHECK INPUT SIGNAL FOR ECM.** 1) Turn ignition to OFF. 2) Disconnect connector from ECM, then connect ST. <Ref. to EN(SOHCw/oOBD)-23, HOW TO CHECK I/O SIGNAL FOR ECM, Engine Control Module (ECM) I/O Signal.> ST 498307600 CHECK BOARD KIT 3) Turn ignition switch to ON. 4) Measure voltage between ECM and engine ground. ***Connector & terminal*** ***(D) No. 51 (+) — Engine ground (–):***	Is the voltage between 3.4 V and 3.6 V?	Go to step **3**.	Replace pressure sensor. <Ref. to FU(SOHCw/oOBD)-29, Pressure Sensor.>
3	**CHECK INPUT SIGNAL FOR ECM.** 1) Start engine, and idle it. 2) Measure voltage between ECM and engine ground. ***Connector & terminal*** ***(D) No. 51 (+) — Engine ground (–):***	Is the voltage between 1.2 V and 1.8 V?	Go to step **4**.	Replace pressure sensor. <Ref. to FU(SOHCw/oOBD)-29, Pressure Sensor.>
4	**CHECK INPUT SIGNAL FOR ECM.** 1) Stop engine, and turn ignition switch to ON. 2) Measure voltage between ECM terminals while throttle valve is fully closed. ***Terminal*** ***No. 23 (+) — No. 21 (–):***	Is the voltage between 0.2 V and 1.0 V?	Go to step **5**.	Replace throttle position sensor. <Ref. to FU(SOHCw/oOBD)-26, Throttle Position Sensor.>
5	**CHECK INPUT SIGNAL FOR ECM.** Measure voltage between ECM terminals while throttle valve is fully opened. ***Terminal*** ***No. 23 (+) — No. 21 (–):***	Is the voltage between 4.2 V and 4.7 V?	Go to step **6**.	Replace throttle position sensor. <Ref. to FU(SOHCw/oOBD)-26, Throttle Position Sensor.>
6	**CHECK IDLE AIR CONTROL SOLENOID VALVE.** 1) Start engine, and idle it. 2) Disconnect connector from idle air control solenoid valve.	Does engine revolution change?	Go to step **7**.	Replace idle air control solenoid valve. <Ref. to FU(SOHCw/oOBD)-31, Idle Air Control Solenoid Valve.>

No.	Step	Check	Yes	No
7	**CHECK POOR CONTACT.** Check poor contact in ECM connector.	Is there poor contact in ECM connector?	Repair poor contact in ECM connector.	Contact your Subaru distributor. NOTE: Inspection by your Subaru distributor is required, because probable cause is deterioration of multiple parts.

O: DTC 85 CHARGE SYSTEM S068521G71

- **DIAGNOSIS:**
  - Power source voltage of the ECM is low or high.
- **TROUBLE SYMPTOM:**
  - Charge warning light comes on.

CAUTION:
After repair or replacement of faulty parts, conduct CLEAR MEMORY and INSPECTION MODES. <Ref. to EN(SOHCw/oOBD)-31 OPERATION, Clear Memory Mode.> and <Ref. to EN(SOHCw/oOBD)-29 OPERATION, Inspection Mode.>

- **WIRING DIAGRAM:**

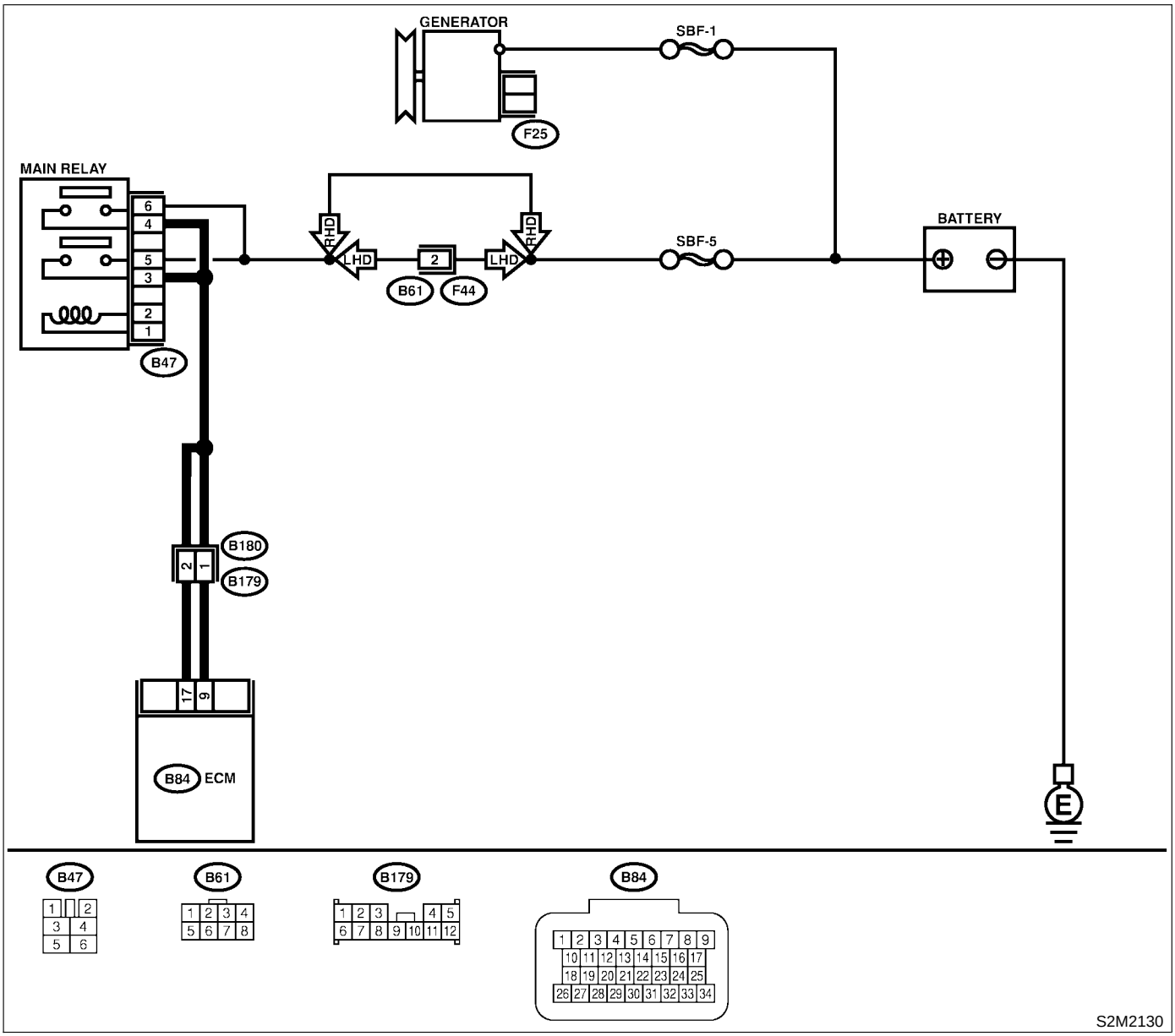

No.	Step	Check	Yes	No
1	**CHECK GENERATOR.** 1) Start engine. 2) Idling after warm-up. 3) Measure voltage between generator B terminal and chassis ground. ***Terminal*** ***Generator B terminal — Chassis ground:***	Is the voltage between 10.8 V and 16.2 V?	Go to step **2**.	Repair generator. <Ref. to SC-12, Generator.>
2	**CHECK GENERATOR.** 1) Run the engine at 5,000 rpm. 2) Measure voltage between generator B terminal and chassis ground. ***Terminal*** ***Generator B terminal (+) — Chassis ground (−):***	Is the voltage between 10.8 V and 16.2 V?	Go to step **3**.	Repair generator. <Ref. to SC-12, Generator.>
3	**CHECK BATTERY TERMINAL.** Turn ignition switch to OFF.	Are the positive and negative battery terminals tightly clamped?	Go to step **4**.	Tighten the clamp of terminal.
4	**CHECK INPUT VOLTAGE OF ECM.** 1) Disconnect connector from ECM, then connect ST. <Ref. to EN(SOHCw/oOBD)-23, HOW TO CHECK I/O SIGNAL FOR ECM, Engine Control Module (ECM) I/O Signal.> ST 4983907600 CHECK BOARD KIT 2) Run the engine at idle. 3) Measure voltage between ECM connector and chassis ground. ***Connector & terminal*** ***(B) No. 27 (+) — Chassis ground (−):*** ***(C) No. 36 (+) — Chassis ground (−):***	Is the voltage between 10.8 V and 16.2 V?	Go to step **5**.	Repair harness connector between battery, main relay and ECM.
5	**CHECK POOR CONTACT IN CONNECTORS.**	Is there poor contact in connectors between generator, battery and ECM?	Repair connector.	Go to step **6**.
6	**CHECK ECM.** 1) Connect all connectors. 2) Erase the memory. 3) Perform inspection mode. 4) Read out the trouble code.	Is the same trouble code as in the current diagnosis still being output?	Replace generator.	Go to step **7**.
7	**CHECK ANY OTHER TROUBLE CODES APPEARANCE.**	Are other trouble codes being output?	Proceed with the diagnosis corresponding to the trouble code.	A temporary poor contact.

15. General Diagnostic Table S068257

A: INSPECTION S068257A10

NOTE:
- Malfunction of parts other than those listed is also possible.
- The right-hand priority column indicates the inspection priority of probable causes of the symptom. Carry out the check starting from A.

Symptom	Problem parts	Priority
1. Engine does not start. (internal combustion does not occur.)	1) ECM power supply	A
	2) Engine ground terminal	A
	3) Crankshaft position sensor	B
	4) Fuel pump	B
	5) Pressure regulator	B
	6) Engine coolant temperature sensor	C
	7) Ignition coil & ignitor	C
	8) Spark plug	C
	9) Fuel injector	C
	10) Idle air control solenoid valve	C
2. Engine does not start. (internal combustion occurs.)	1) ECM power supply	A
	2) Spark plug	A
	3) Engine coolant temperature sensor	B
	4) Pressure regulator	B
	5) Pressure sensor	C
	6) Fuel pump	C
	7) Fuel injector	C
	8) Idle air control solenoid valve	C
3. Engine does not start. (engine stalls after internal combustion.)	1) ECM power supply	A
	2) Pressure sensor	A
	3) Engine coolant temperature sensor	B
	4) Spark plug	B
	5) Ignition coil	C
	6) Fuel pump	C
	7) Pressure regulator	C
	8) Fuel injector	C
	9) Idle air control solenoid valve	C
4. Engine stalls.	1) Pressure sensor	B
	2) Spark plug	B
	3) Accelerator cable is out of adjustment	B
	4) ECM power supply	C
	5) Throttle position sensor	C
	6) Crankshaft position sensor	C
	7) Vehicle speed sensor	C
	8) Ignition coil	C
	9) Fuel pump	C
	10) Idle air control solenoid valve	C
5. Rough idling	1) Spark plug	A
	2) Pressure sensor	B
	3) Engine coolant temperature sensor	B
	4) Pressure regulator	B
	5) Idle air control solenoid valve	B
	6) Air leak in air intake system	B
	7) ECM power supply	C
	8) Throttle position sensor	C
	9) Intake air temperature sensor	C
	10) Oxygen sensor	C
	11) Fuel pump	C
	12) Fuel injector	C
	13) Test mode or read memory connectors are connected.	C

GENERAL DIAGNOSTIC TABLE

Symptom	Problem parts	Priority
6. Hard to drive at constant speed	1) Pressure regulator 2) Fuel injector 3) Pressure sensor 4) Engine coolant temperature sensor 5) Throttle position sensor 6) Fuel pump	A B C C C C
7. Poor acceleration/deceleration	1) Spark plug 2) Throttle position sensor 3) Ignition coil 4) Fuel pump 5) Pressure regulator 6) Fuel injector 7) Pressure sensor 8) Engine coolant temperature sensor 9) Idle air control solenoid valve 10) Knock sensor	A B B B B B C C C C
8. Poor return to idling	1) Accelerator cable is out of adjustment 2) Throttle position sensor 3) Idle air control solenoid valve 4) Pressure sensor 5) Engine coolant temperature sensor	A B B C C
9. Back fire	1) Spark plug 2) Fuel injector 3) Ignition coil and ignitor 4) Fuel pump 5) Pressure regulator	A B C C C
10. Knocking	1) Fuel pump 2) Pressure regulator 3) Engine coolant temperature sensor 4) Knock sensor	B B C C
11. Excessive fuel consumption	1) Engine coolant temperature sensor 2) Pressure sensor 3) Intake air temperature sensor 4) Pressure regulator	A B B B
12. Shocks while driving	1) Pressure regulator 2) ECM power supply 3) Throttle position sensor	A B B
13. Poor engine revving	1) Pressure regulator 2) Pressure sensor 3) Engine coolant temperature sensor 4) Throttle sensor 5) Intake air temperature sensor 6) Fuel pump	A B B B B B
14. Remarks	1) ECM power supply 2) Pressure sensor 3) Pressure regulator 4) Idle air control solenoid valve 5) Air leak in air intake system	A* B* B* B* B*

A*: Including ECM ground circuit
B*: Check hoses.