32.Wiper Deicer System

A: WIRING DIAGRAM

W/D-01

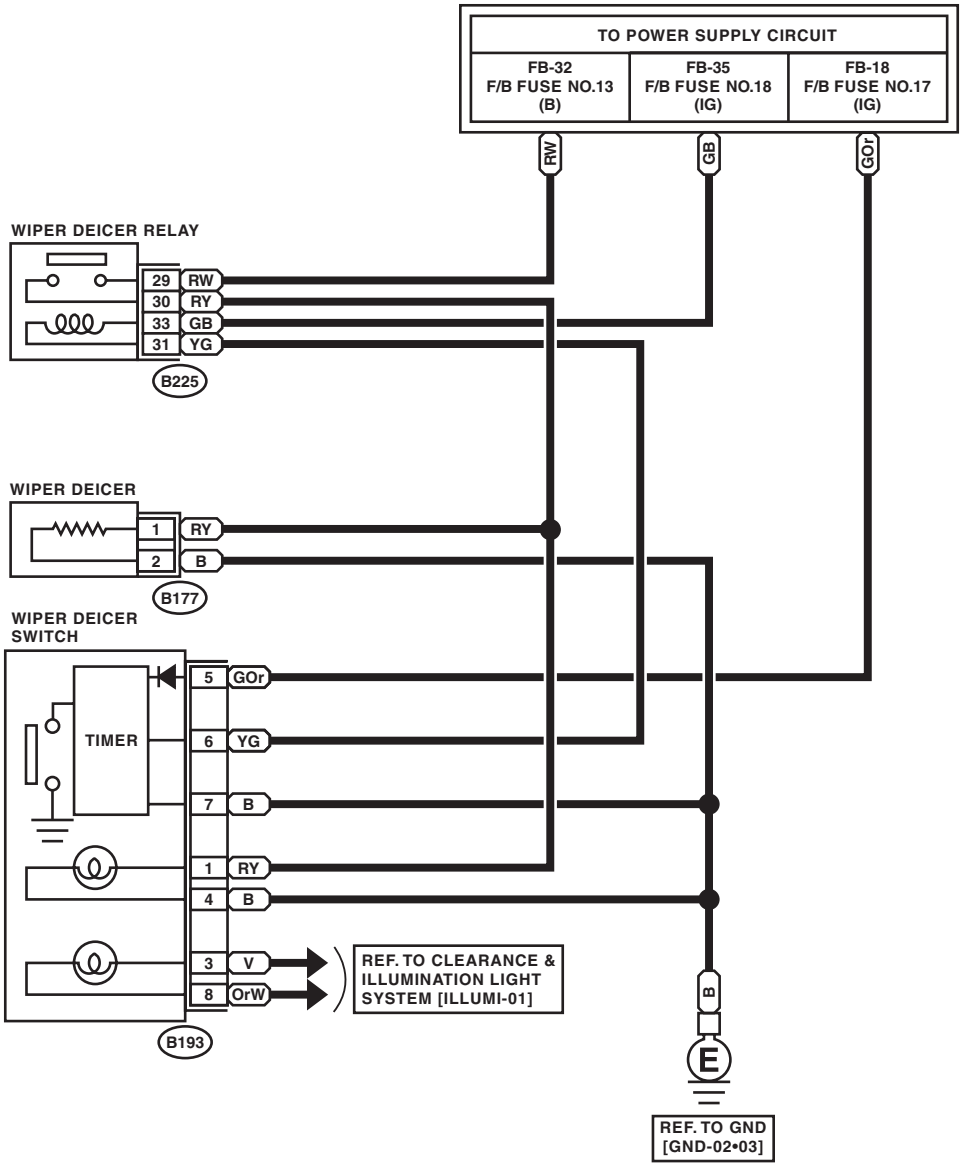

W/D-01

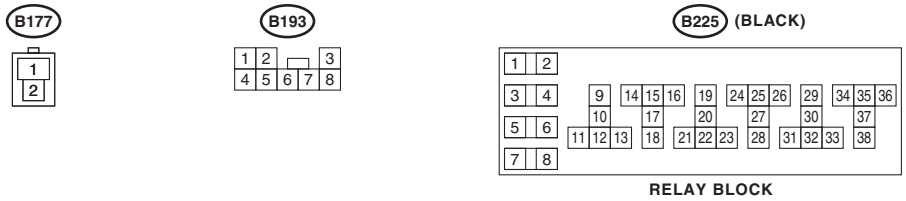

WI-12325