# 44.Oil Pressure Warning Light System

## A: WIRING DIAGRAM

OIL/P-01

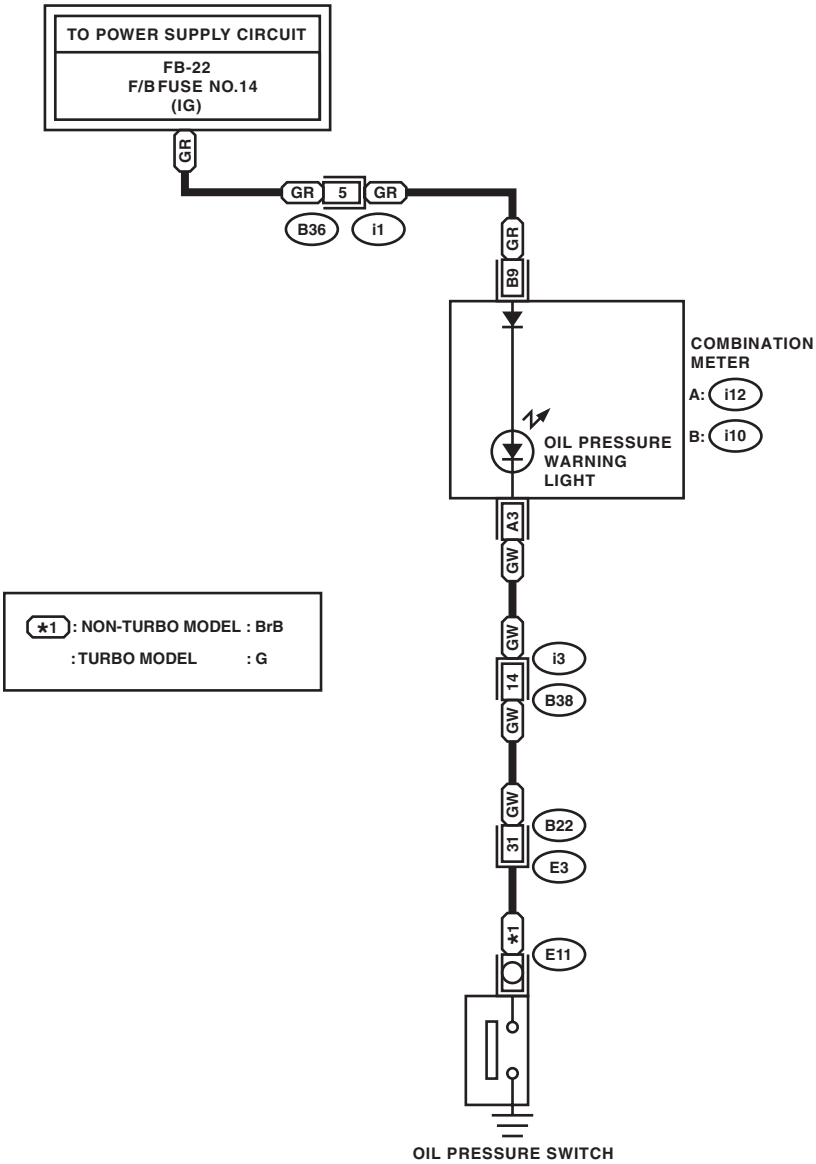


OIL/P-01

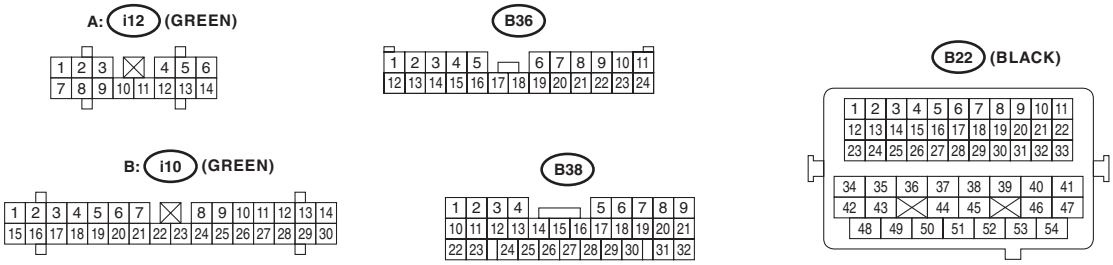


WI-12308