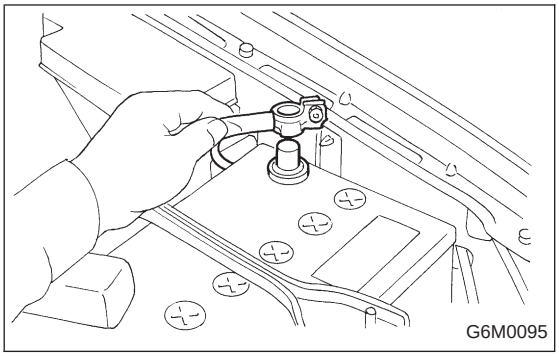

2. Generator

A: REMOVAL AND INSTALLATION

1) Disconnect battery ground cable.

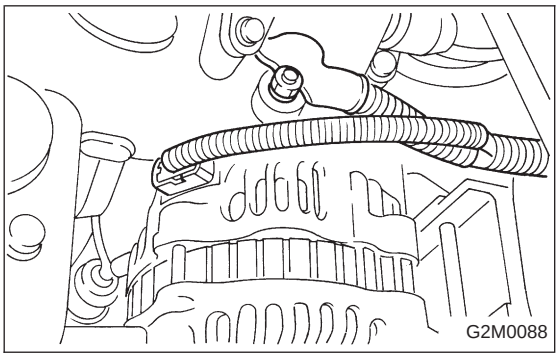

2) Disconnect connector and terminal from generator.

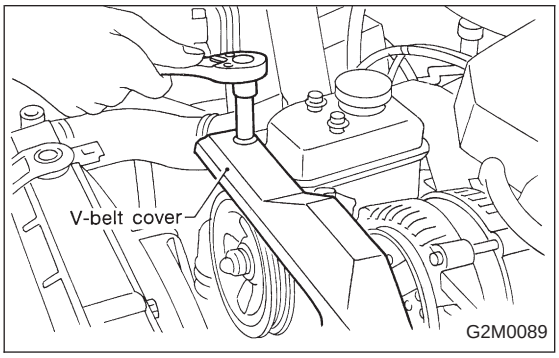

3) Remove V-belt cover.
4) Remove front side V-belt.

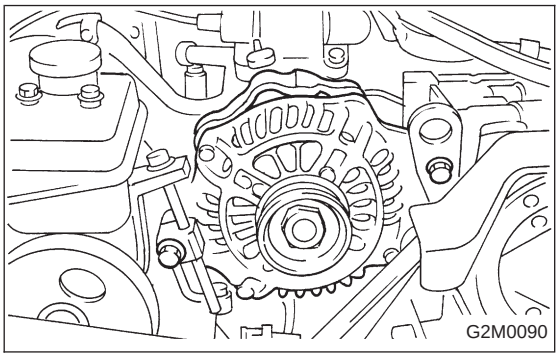

5) Remove bolts which install generator onto bracket.

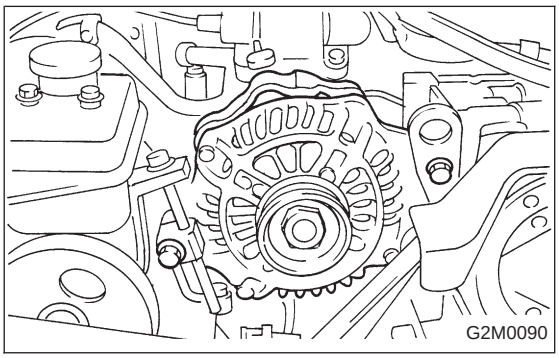

6) Installation is in the reverse order of removal.

CAUTION:
Check and adjust V-belt tension. <Ref. to 1-5 [W1A0].>

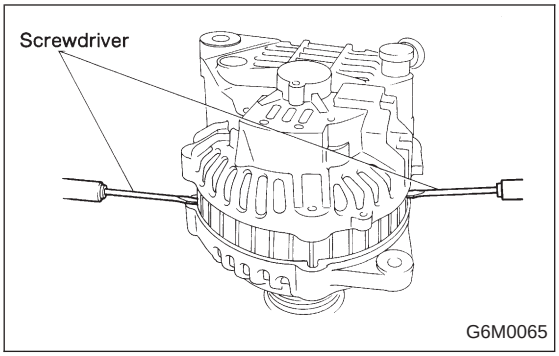

B: DISASSEMBLY

1) Remove the four through-bolts. Then insert the tip of a flat-head screwdriver into the gap between the stator core and front bracket. Pry then apart to disassemble.

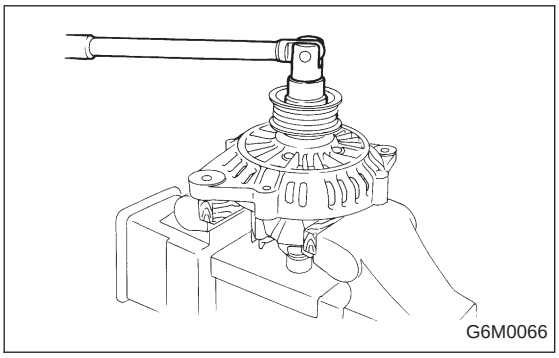

2) Hold rotor with a vise and remove pulley nut.

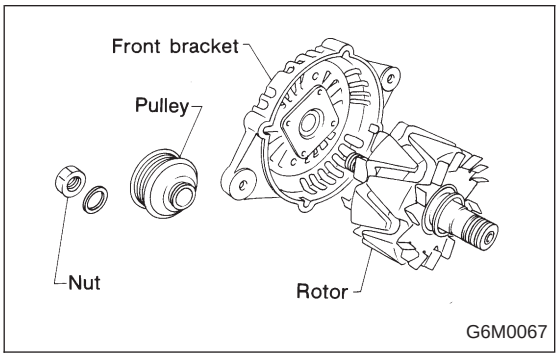

CAUTION:
When holding rotor with vise, insert aluminum plates or wood pieces on the contact surfaces of the vise to prevent rotor from damage.

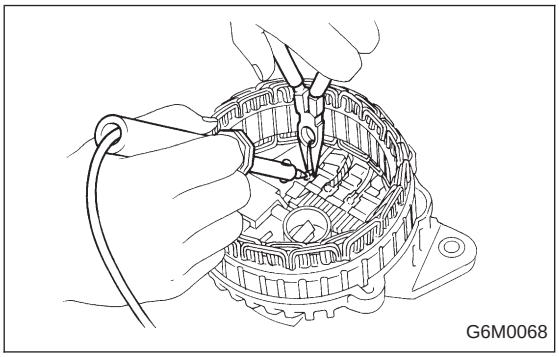

3) Unsolder connection between rectifier and stator coil to remove stator coil.

CAUTION:
Finish the work rapidly (less than three seconds) because the rectifier cannot withstand heat very well.

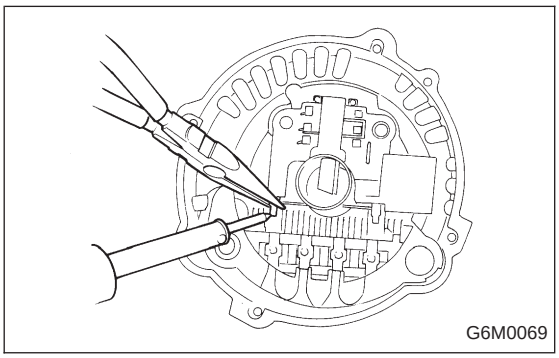

4) Remove screws which secure IC regulator to rear cover, and unsolder connection between IC regulator and rectifier to remove IC regulator.

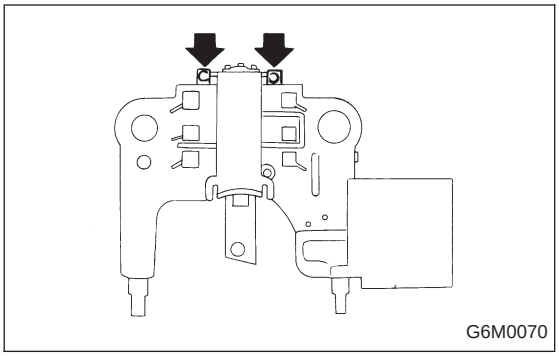

5) Remove the brushes by unsoldering at the pigtails.

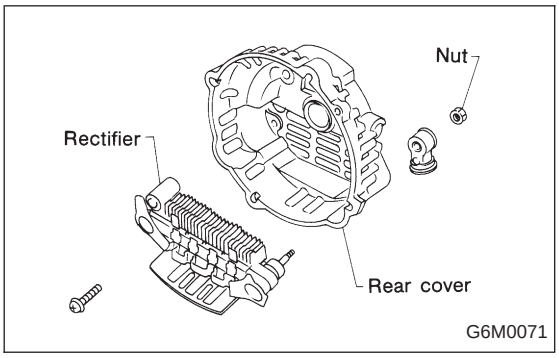

6) Remove the nut and insulating bushing at terminal B. Remove rectifier.

C: INSPECTION AND REPAIR

1. DIODE

CAUTION:
Never use a megger tester (measuring use for high voltage) or any other similar measure for this test; otherwise, the diodes may be damaged.

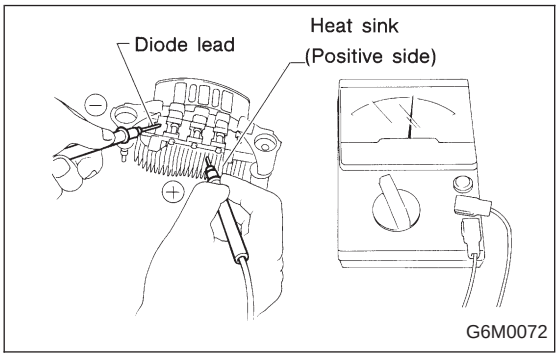

1) Checking positive diode
Check for continuity between the diode lead and the positive side heat sink. The positive diode is in good condition if continuity exists only in the direction from the diode lead to the heat sink.

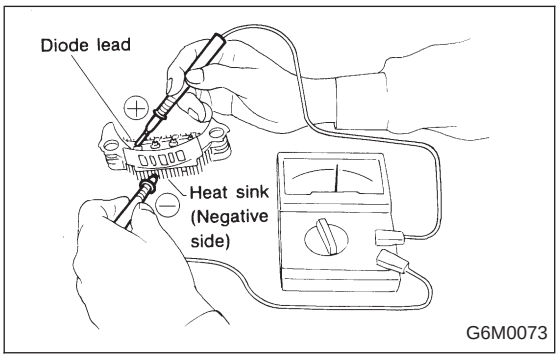

2) Checking negative diode
Check for continuity between the negative side heat sink and diode lead. The negative diode is in good condition if continuity exists only in the direction from the heat sink to the diode lead.

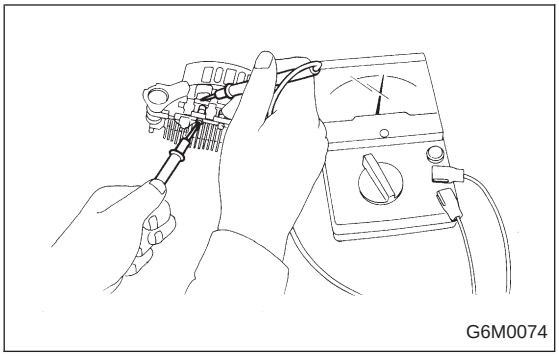
G6M0074

3) Checking trio diode
Check the trio diode using a circuit tester. It is in good condition if continuity exists only in one direction.

2. ROTOR

1) Slip ring surface
Inspect slip rings for contamination or any roughness of the sliding surface. Repair slip ring surface using a lathe or sand paper.

2) Slip ring outer diameter
Measure slip ring outer diameter. If slip ring is worn replace rotor assembly.

Slip ring outer diameter:
Standard
22.7 mm (0.894 in)
Limit
22.1 mm (0.870 in)

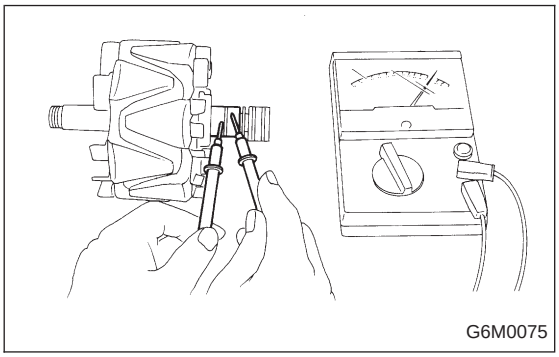
G6M0075

3) Continuity test
Check resistance between slip rings using circuit tester.
If the resistance is not within specification, replace rotor assembly.

Specified resistance:
Approx. 3 Ω (A2T39091)
Approx. 2 — 6 Ω (A2T37291)

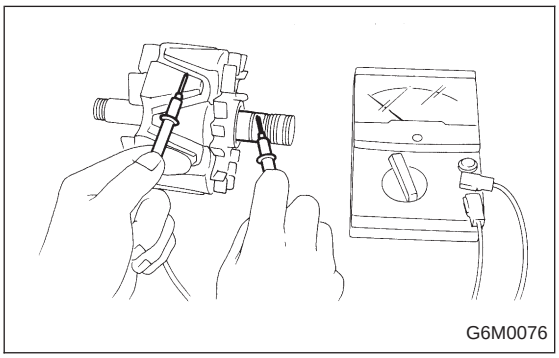
G6M0076

4) Insulation test
Check continuity between slip ring and rotor core or shaft. If continuity exists, the rotor coil is short-circuited, and so replace rotor assembly.

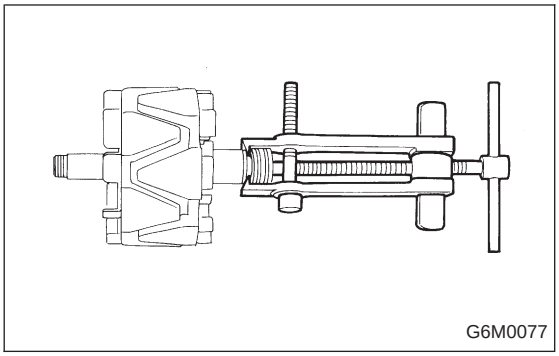

5) Ball bearing (rear side)

(1) Check rear ball bearing. Replace if it is noisy or if rotor does not turn smoothly.

(2) The rear bearing can be removed by using common bearing puller.

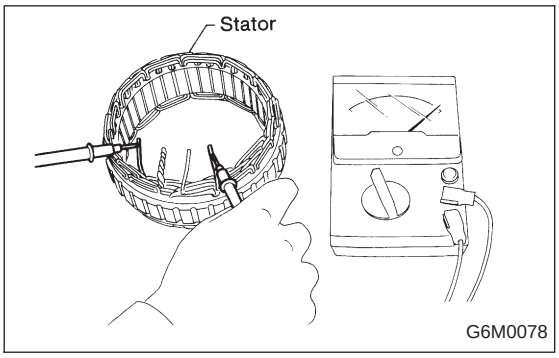

3. STATOR

1) Continuity test

Inspect stator coil for continuity between each end of the lead wires. If there is no continuity between individual lead wires, the lead wire is broken, and so replace stator assembly.

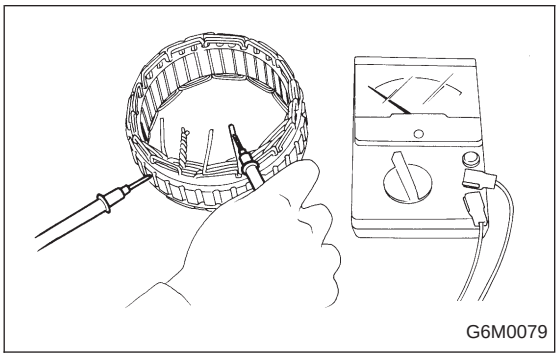

2) Insulation test

Inspect stator coil for continuity between stator core and each end of the lead wire. If there is continuity, the stator coil is short-circuited, and so replace stator assembly.

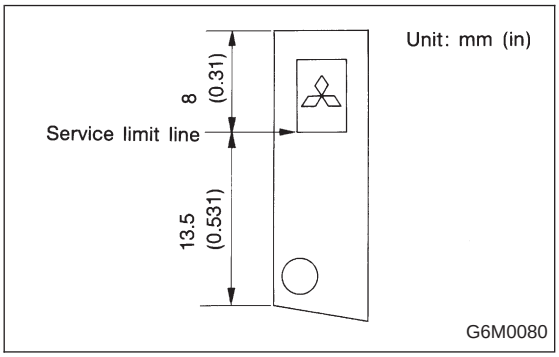

4. BRUSH

1) Measure the length of each brush. If wear exceeds the service limit, replace the brush. Each brush has the service limit mark on it.

Brush length:

Standard

21.5 mm (0.846 in)

Service limit

8.0 mm (0.315 in)

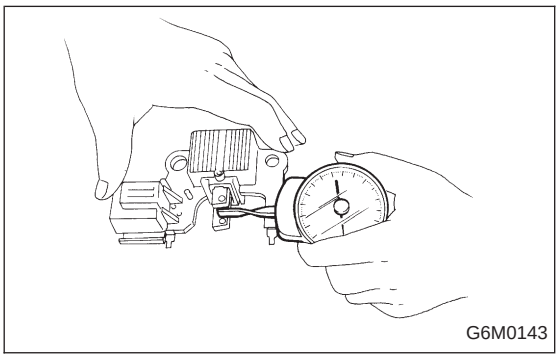

2) Checking brush spring for proper pressure

Using a spring pressure indicator, push the brush into the brush holder until its tip protrudes 2 mm (0.08 in). Then measure the pressure of the brush spring. If the pressure is less than 3.236 N (330 g, 11.64 oz), replace the brush spring with a new one. The new spring must have a pressure of 5.786 to 6.963 N (590 to 710 g, 20.81 to 25.04 oz).

5. BEARING (FRONT SIDE)

1) Check front ball bearing. If resistance is felt while rotating, or if abnormal noise is heard, replace the ball bearing.

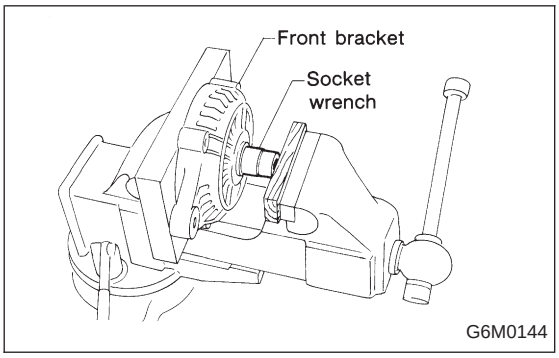

2) Replacing front bearing

(1) Remove front bearing retainer.

(2) Closely install a fit tool on the bearing inner race. Press the bearing down out of front bracket with a hand press or vise. A socket wrench can serve as the tool.

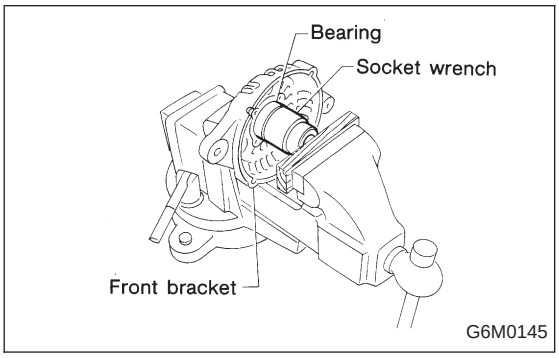

(3) Set a new bearing and closely install a fit tool on the bearing outer race. Press the bearing down into place with a hand press or vise. A socket wrench can serve as the tool.

(4) Install front bearing retainer.

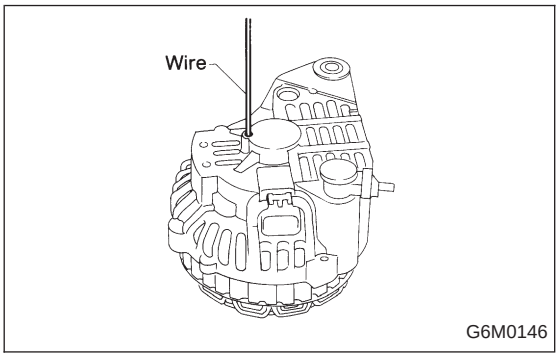

D: ASSEMBLY

To assemble, reverse order of disassembly.

1) Pulling up brush

Before assembling, press the brush down into the brush holder with your finger and secure in that position by passing a [2 mm (0.08 in) dia. length 4 to 5 cm (1.6 to 2.0 in)] wire through the hole shown in the figure.

CAUTION:
Be sure to remove the wire after reassembly.

2) Heat the rear bracket [50 to 60°C (122 to 140°F)] and press the rear bearing into the rear bracket. Then lubricate the rear bracket.

3) After reassembly, turn the pulley by hand to check that the rotor turns smoothly.