5. Compressor Clutch Diagnosis

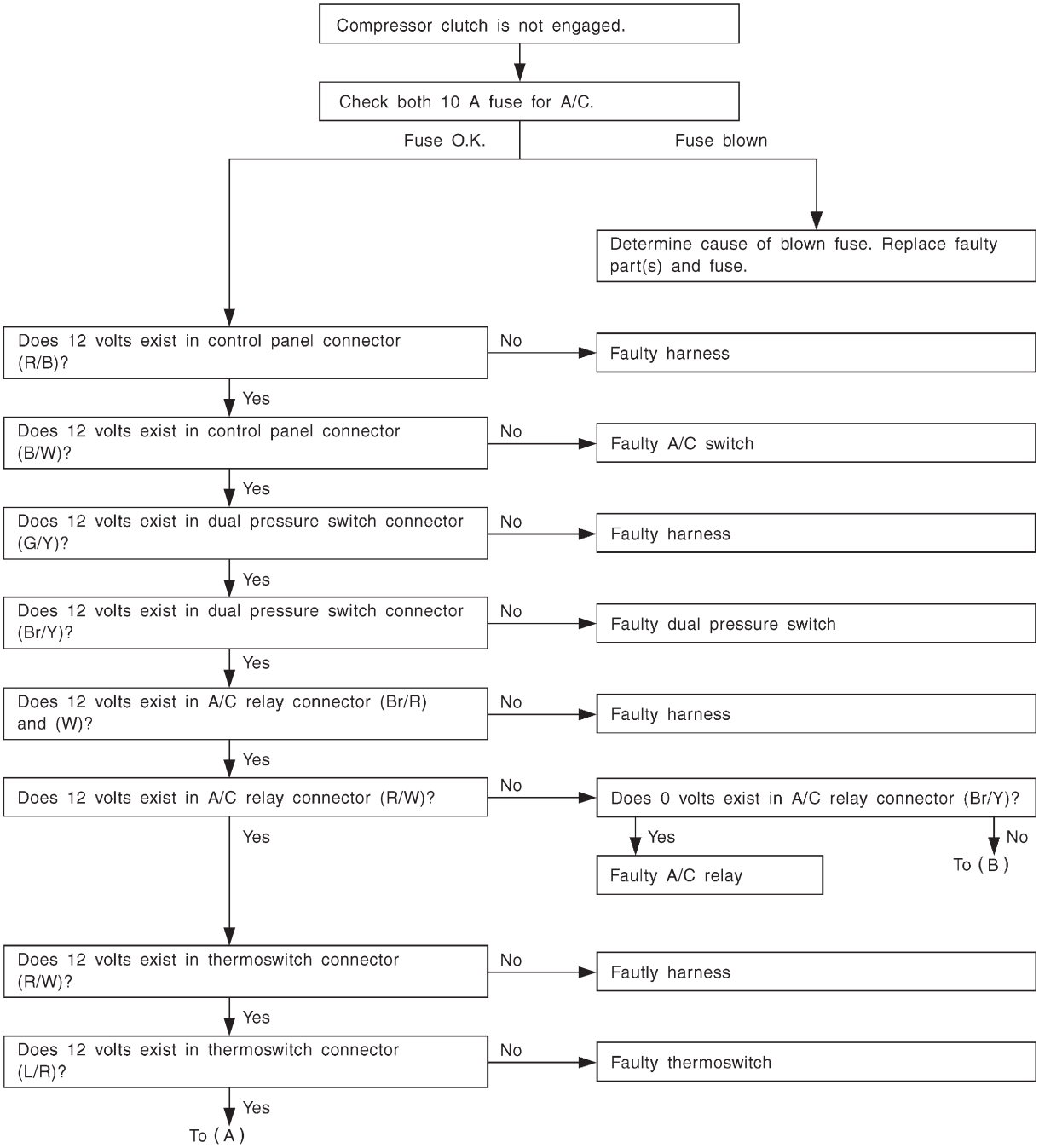

B4M1105A

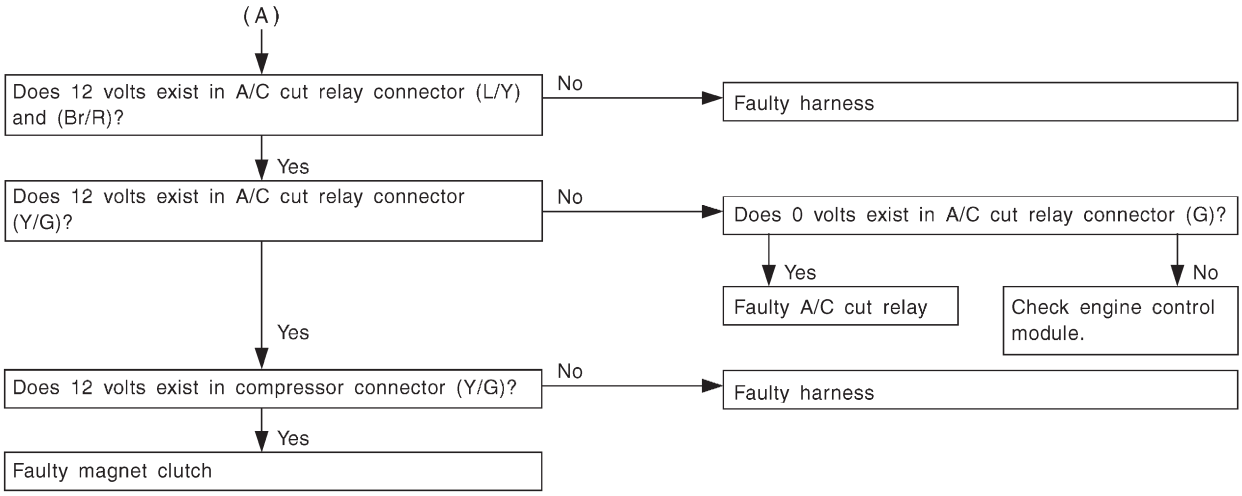
(A)
Does 12 volts exist in A/C cut relay connector (L/Y) and (Br/R)?
No
Faulty harness
Yes
Does 12 volts exist in A/C cut relay connector (Y/G)?
No
Does 0 volts exist in A/C cut relay connector (G)?
Yes
Faulty A/C cut relay
No
Check engine control module.
Yes
Does 12 volts exist in compressor connector (Y/G)?
No
Faulty harness
Yes
Faulty magnet clutch

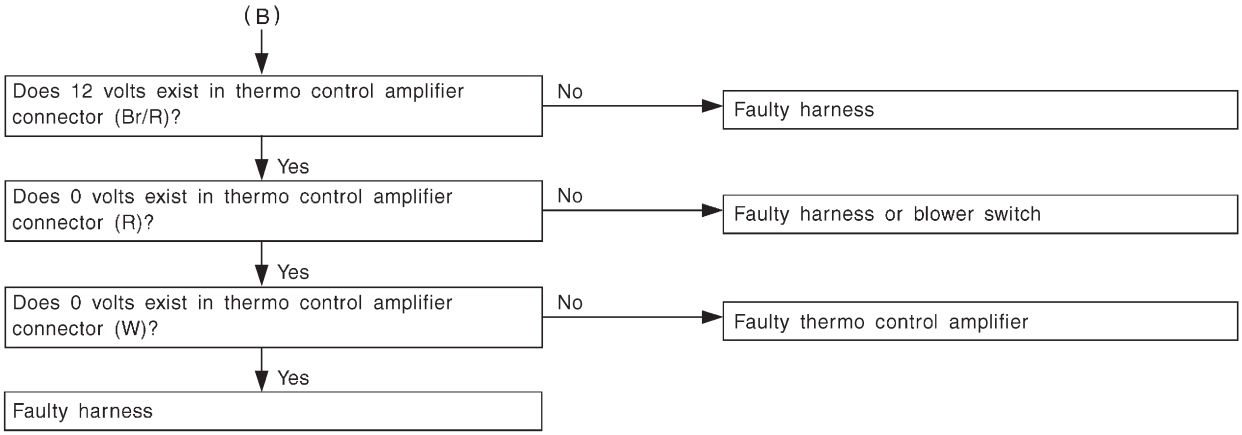
(B)
Does 12 volts exist in thermo control amplifier connector (Br/R)?
No
Faulty harness
Yes
Does 0 volts exist in thermo control amplifier connector (R)?
No
Faulty harness or blower switch
Yes
Does 0 volts exist in thermo control amplifier connector (W)?
No
Faulty thermo control amplifier
Yes
Faulty harness

B4M1106A