1. SRS Airbag

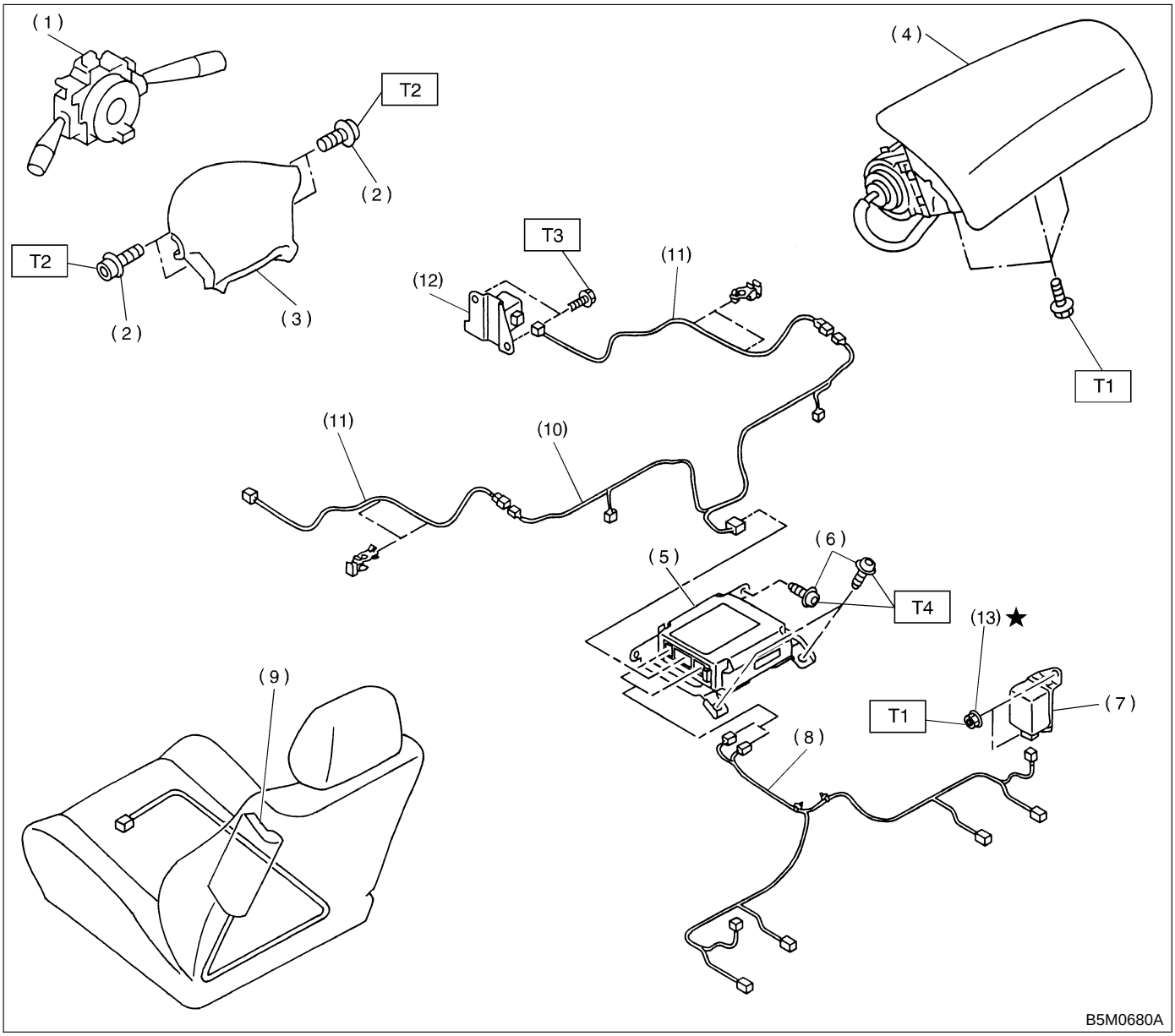

(1) Combination switch ASSY with roll connector
(2) TORX® bolt T30
(3) Airbag module ASSY (Driver)
(4) Airbag module ASSY (Passenger)
(5) Airbag control module
(6) TORX® bolt T40
(7) Side airbag sensor
(8) Side airbag harness
(9) Side airbag module
(10) Airbag main harness
(11) Front sub sensor harness
(12) Front sub sensor
(13) TORX® nut E12

Tightening torque: N·m (kg-m, ft-lb)
T1: 7.4±2.0 (0.75±0.2, 5.4±1.4)
T2: 10±2 (1.0±0.2, 7.2±1.4)
T3: 20±4 (2.0±0.4, 14.5±2.9)
T4: 25±2 (2.5±0.2, 18.1±1.4)