31. Outside Temperature Display System S903668

A: SCHEMATIC S903668A21

O/TEMP-01

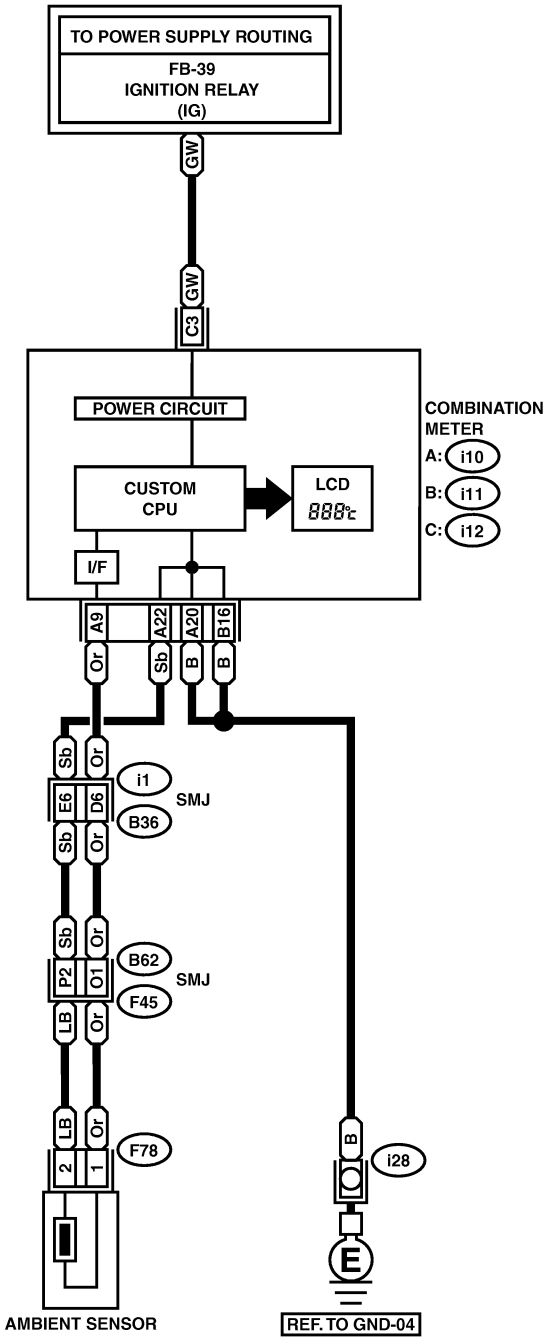

O/TEMP-01

F78 (BLACK)

C: i12 (GREEN)

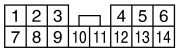

B: i11 (GREEN)

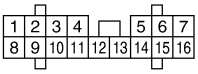

A: i10 (GREEN)

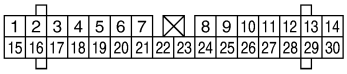

BU96-20