38. Remote Controlled Rearview Mirror System S903459

A: SCHEMATIC S903459A21

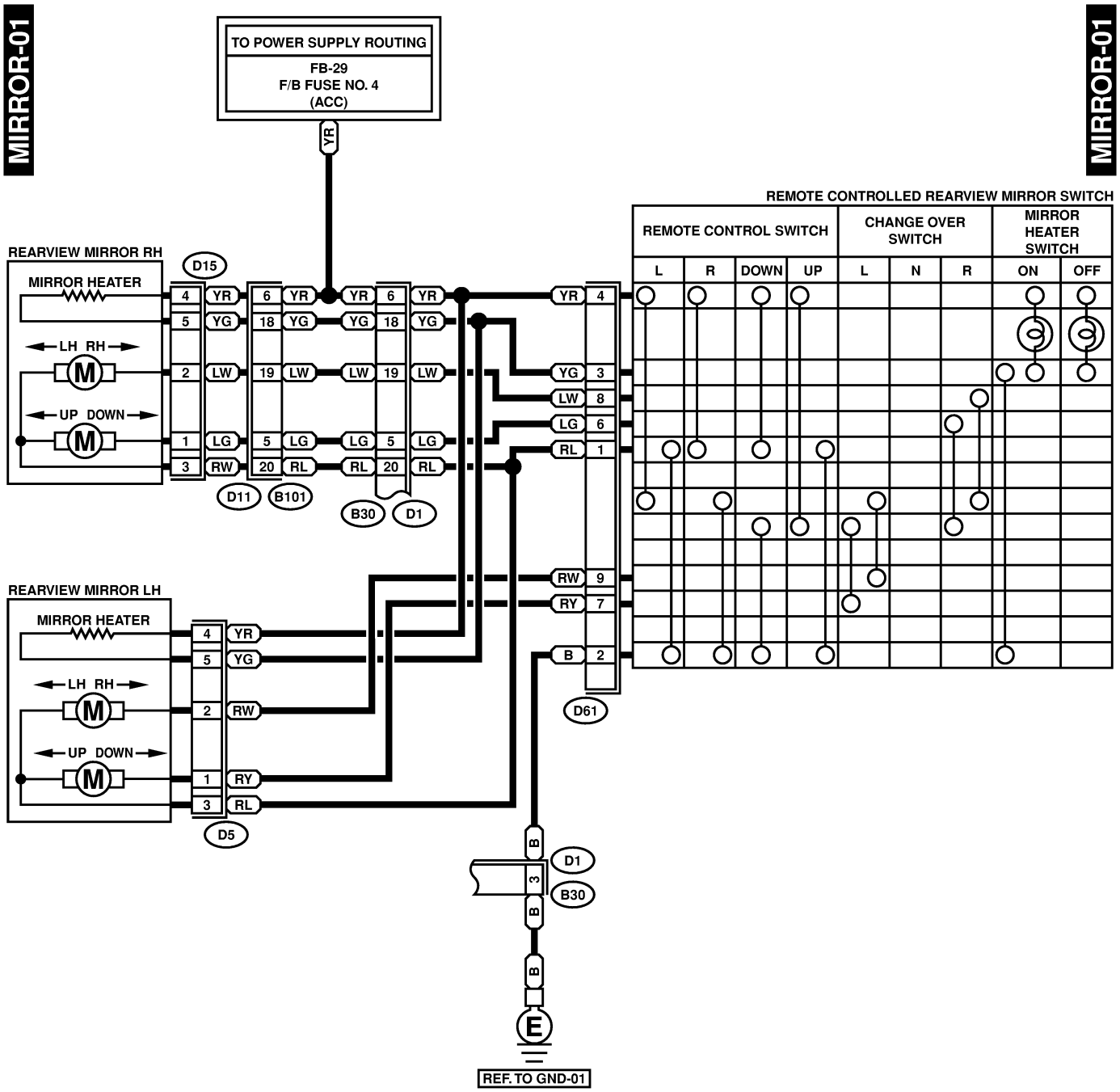

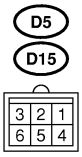

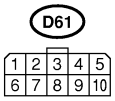

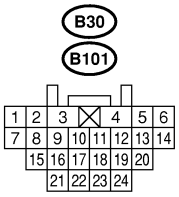

BU79-21