22. Back-up Light System
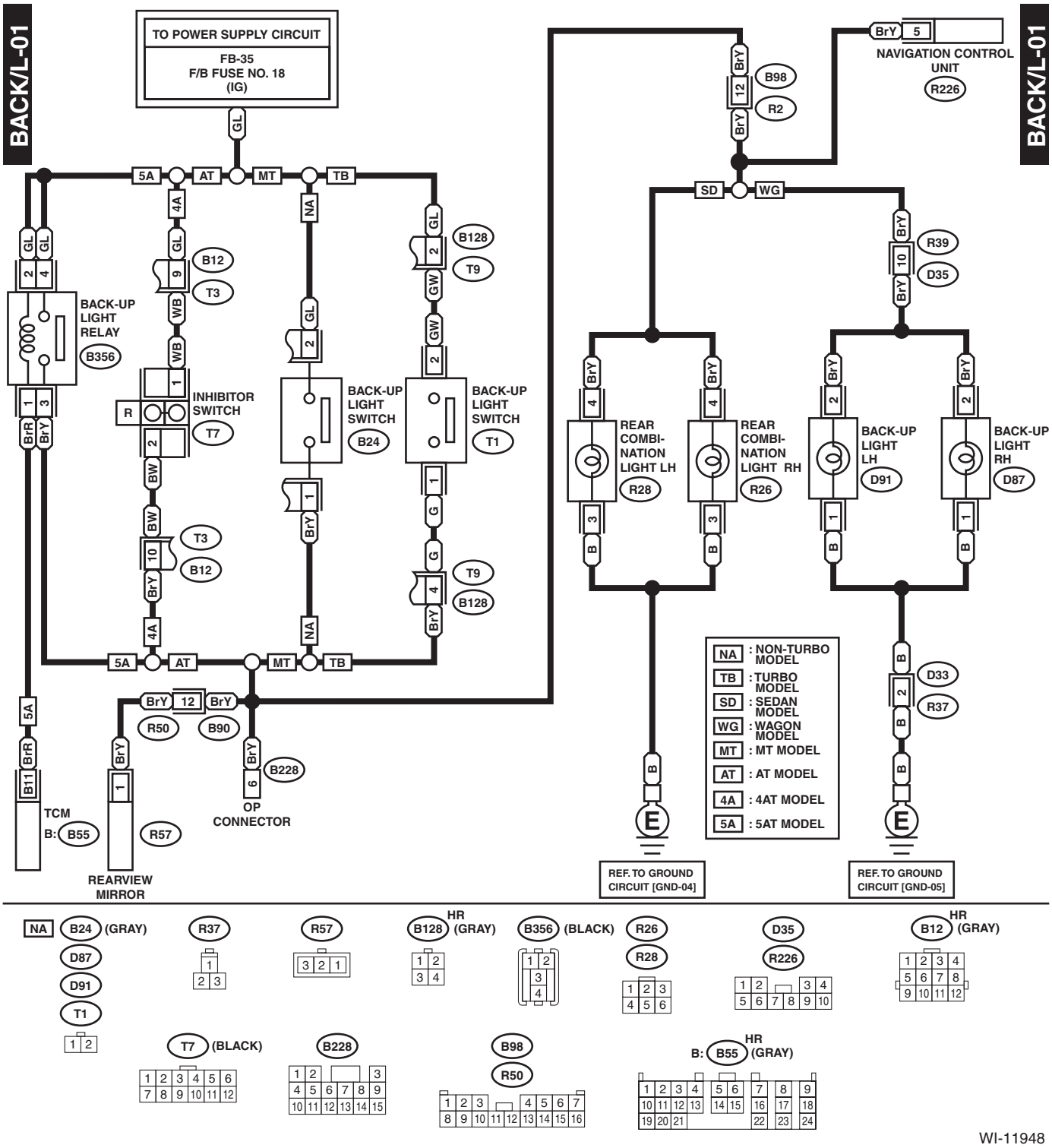
A: WIRING DIAGRAM